YAMAHA

PARTS CATALOGUE

YFZ450V (5TGC) U.S.A.
YFZ450V (5TGE) CANADA
YFZ450V (5TGF) EUROPE
YFZ450V (5TGC) OCEANIA
YFZ450 (5TGC) JAPAN

1E5TG-100E1

(2E5TG-100E1)

YAMAHA GENUINE Parts & Accessories

2009/1/23

NEWS NO.	DATE	COMMENT
PE0-MC-060110	Sep.,10,2008	FIG.9 CARBURETOR LIST CORRECTION
PE0-MC-060123	Oct.,30,2006	FIG.16 SHIFT CAM & FORK ILLUST CORRECTION

YFZ450V/YFZ450
PARTS CATALOGUE
©2005 by Yamaha Motor Co., Ltd.
1st edition, June 2005
All rights reserved.
Any reprinting or unauthorized use
without the written permission of
Yamaha Motor Co., Ltd.
is expressly prohibited.
Printed in Japan.

A3

A4

FOREWORD

This Parts Catalogue is related to the parts for the model(s) on the cover page. When you are ordering replacement parts, please refer to this Parts Catalogue and quote both part numbers and part names correctly.

1. Modifications or additions which have been made after the issue of the Parts Catalogue will be announced in the Parts News.
   It is advisable that you make the necessary corrections to the Parts Catalogue according to the Parts News.

2. Abbreviations
   The following abbreviations are used in this Parts Catalogue.

   “UR” Use specified parts number.
   “UN” Use as many as needed.
   “AP” Alternate Parts
   “LM” Locally Made (Parts need to be ordered locally)
   “F#” Frame No. (Applicable machine No.)
   “O/S” Over Size

3. The number of components for assembly
   - Parts, which are to be supplied in an assembly, are listed with a dot (.) in front of the part name as shown below.
   - The numeral appearing to the right of each component part indicates the quantity of parts for each assembly unit.

PART NO.	DESCRIPTION	Q’TY	REMARKS
2F5–83310–60	FRONT FLASHER LIGHT ASSY	2	
115–83311–60	.BULB (6V–18W)	1	

4. Applicable colours of graphics are represented in the “REMARKS” as shown below.

PART NO.	DESCRIPTION	Q’TY	REMARKS
2N4–24110–00–X5	FUEL TANK COMP.	2	MXR
3J1–24240–10	.GRAPHIC, FUEL TANK	1	FOR MXR

5. Note that the illustrations for reference in finding parts numbers are not to be used for assembling. When assembling, please use the applicable service manual.

6. The asterisk (*) before a reference number indicates modified items after the first edition.

7. Applicable Serial No.

Engine Serial No.

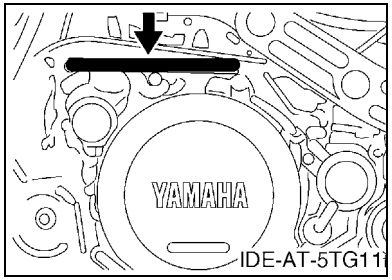

Frame Serial No.

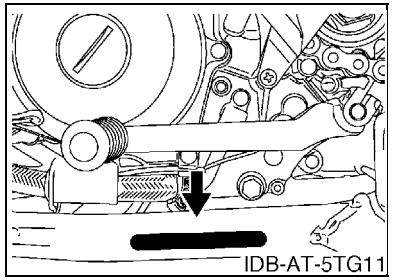

8. Applicable Colour Code (The (*) mark shows Model colour.)

Abbreviation	Colour Name	Colour Code
BWS1(*)	BLUISH WHITE SOLID 1	0892
DPBSE(*)	DEEP PURPLISH BLUE SOLID E	0583

9. Quantity Column Information

Column No.	Name Of Q’ty Column	Destination
1	USA	U.S.A.
2	CAN	CANADA
3	EUR	EUROPE
4	OCE	OCEANIA
5	JPN	JAPAN

MODEL LABEL

(1) A label called “Model Label” is affixed in the location as indicated in (3) below.
When using this parts catalogue, please be sure to cross–reference the “model code – production code No.” in the catalogue with the “model code – production code No.” indicated on the Model Label affixed onto the product concerned.

(2) “Model Label” Indication

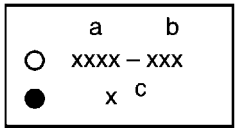

a: Model Type Code
b: Production Code No.
c: Colouring Type

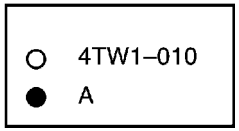

(3) Model Label Affixing Location

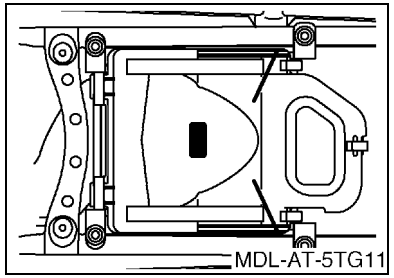

(4) Colouring Information

Model Code	Colouring Type Code	Colour Code	Colour Name	Abbreviation
5TGC	A	0583	DEEP PURPLISH BLUE SOLID E	DPBSE
	B	0892	BLUISH WHITE SOLID 1	BWS1
5TGE	A	0583	DEEP PURPLISH BLUE SOLID E	DPBSE
	B	0892	BLUISH WHITE SOLID 1	BWS1
5TGF	A	0583	DEEP PURPLISH BLUE SOLID E	DPBSE
	B	0892	BLUISH WHITE SOLID 1	BWS1

(5) Model Code – Production Code Number of Model Listed in This Parts Catalogue

Model Code	Production Code No.	Country (destination)
5TGC	010	U.S.A.
	020	AUSTRALIA
		NEW ZEALAND
	030	JAPAN
5TGE	010	CANADA
5TGF	010	EUROPE

Model Code	Production Code No.	Country (destination)

CONTENTS

ENGINE

CYLINDER B2
CRANKSHAFT & PISTON B4
VALVE B5
CAMSHAFT & CHAIN B7
WATER PUMP B8
RADIATOR & HOSE B9
OIL PUMP B10
INTAKE B12
CARBURETOR B14
EXHAUST C3
CRANKCASE C4
CRANKCASE COVER 1 ..... C5
STARTER C7
CLUTCH C8
TRANSMISSION C10
SHIFT CAM & FORK C12

CHASSIS

FRAME C13
FRONT FENDER C15
REAR FENDER D2
OIL TANK D4
REAR ARM D6
REAR SUSPENSION D9
STEERING D10
FRONT SUSPENSION & WHEEL D11
FUEL TANK D14
SEAT D15
FRONT WHEEL E2
FRONT BRAKE CALIPER E3
REAR WHEEL E5
REAR BRAKE CALIPER E6
STEERING HANDLE & CABLE E7
FRONT MASTER CYLINDER E8
STAND & FOOTREST E9
REAR MASTER CYLINDER E10
GUARD E12
GENERATOR E13
STARTING MOTOR E14
HEADLIGHT E15
TAILLIGHT F2
TAILLIGHT 2 ..... F3
HANDLE SWITCH & LEVER F4
ELECTRICAL 1 ..... F5
ELECTRICAL 2 ..... F8
EMBLEM & LABEL 1 ..... F9
EMBLEM & LABEL 2 ..... F10
EMBLEM & LABEL 3 ..... F12
EMBLEM & LABEL 4 ..... F13
EMBLEM & LABEL 5 ..... F14

INDEX

NUMERICAL INDEX M1

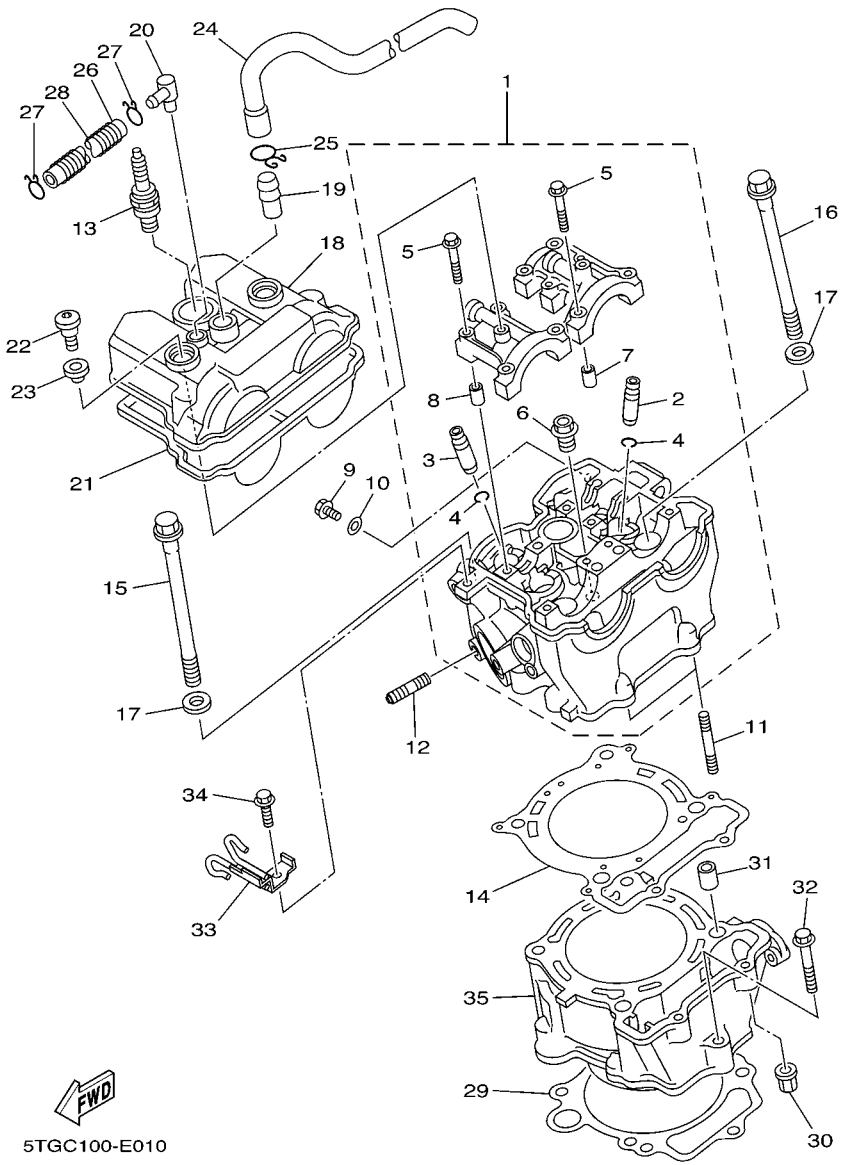

FIG. 1 CYLINDER

REF. NO.	PART NO.	DESCRIPTION	USA	CAN	EUR	OCE	JPN	REMARKS
1	5TG–11102–10	CYLINDER HEAD ASSY	1	1	1	1	1	
2	5TA–11133–10	.GUIDE, VALVE 1	3	3	3	3	3	
3	5TA–11134–10	.GUIDE, VALVE 2	2	2	2	2	2	
4	93440–10153	.CIRCLIP	5	5	5	5	5	
5	90105–06027	.BOLT, FLANGE	10	10	10	10	10	
6	90340–12112	.PLUG, STRAIGHT SCREW	1	1	1	1	1	
7	91808–16023	.PIN, DOWEL	2	2	2	2	2	
8	91808–16023	.PIN, DOWEL	2	2	2	2	2	
9	95027–06010	BOLT, FLANGE	1	1	1	1	1	
10	90430–06014	GASKET	1	1	1	1	1	
11	95617–06635	BOLT, STUD	2	2	2	2	2	
12	90116–08022	BOLT, STUD	2	2	2	2	2	
13	94701–00411	PLUG, SPARK (NGK R CR8E)	1	1	1	1		
	94703–00411	PLUG, SPARK (NGK R CR8E)					1	
14	5TA–11181–00	GASKET, CYLINDER HEAD 1	1	1	1	1	1	
15	90105–104A7	BOLT, FLANGE	2	2	2	2	2	
16	90105–106A3	BOLT, FLANGE	2	2	2	2	2	
17	90201–10025	WASHER, PLATE	4	4	4	4	4	
18	5TG–11191–00	COVER, CYLINDER HEAD 1	1	1	1	1	1	
19	371–11167–01	PIPE, BREATHER 2	1	1	1	1	1	
20	5TG–11167–00	PIPE, BREATHER 2	1	1	1	1	1	
21	5TA–11193–00	GASKET, HEAD COVER 1	1	1	1	1	1	
22	90109–066F0	BOLT	1	1	1	1	1	
23	4KG–1111G–00	RUBBER, MOUNT 1	2	2	2	2	2	
24	5TG–11166–00	PIPE, BREATHER 1	2	2	2	2	2	
25	90467–14015	CLIP	1	1	1	1	1	
26	90445–11182	HOSE (L300)	1	1	1	1	1	

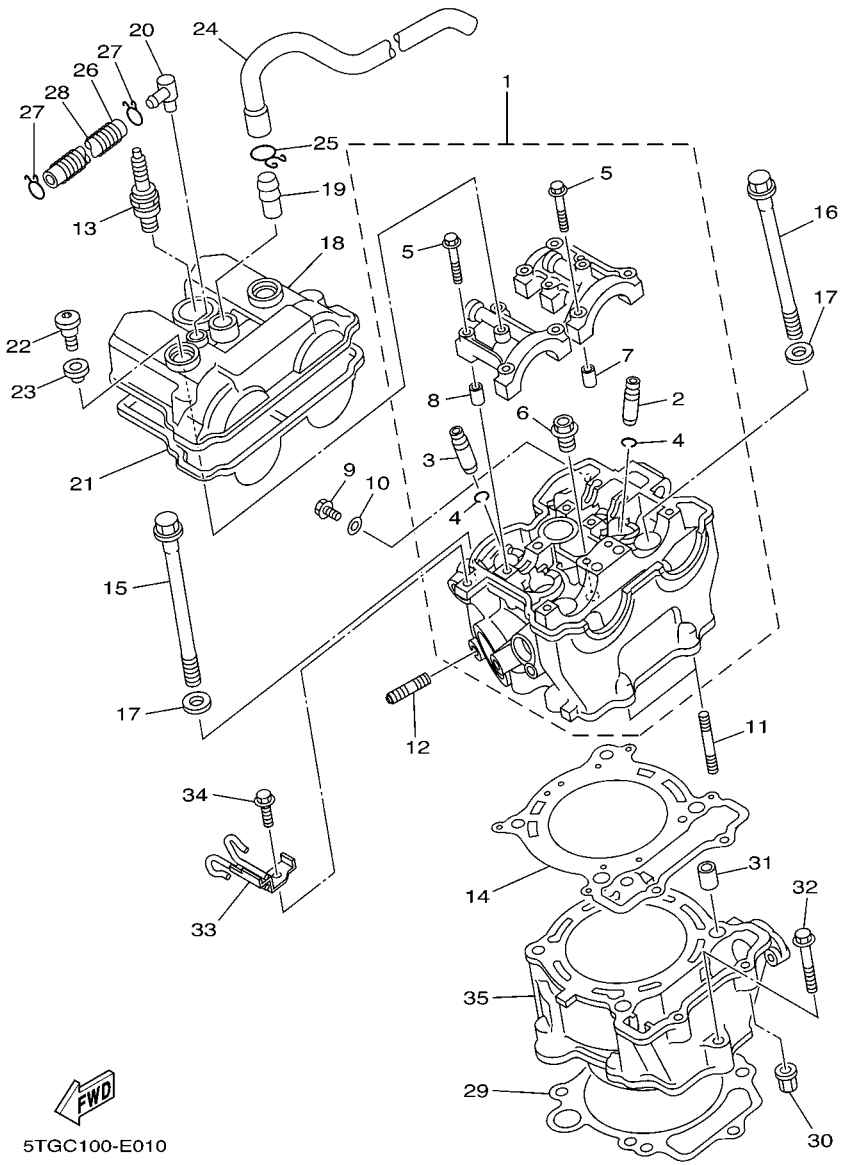

FIG. 1 CYLINDER

REF. NO.	PART NO.	DESCRIPTION	USA	CAN	EUR	OCE	JPN	REMARKS
27	90467–11106	CLIP	2	2	2	2	2	
28	90501–08728	SPRING, COMPRESSION	1	1	1	1	1	
29	5TA–11351–00	GASKET, CYLINDER	1	1	1	1	1	
30	90179–06668	NUT	2	2	2	2	2	
31	93612–16254	PIN, DOWEL	2	2	2	2	2	
32	95024–06035	BOLT, FLANGE	1	1	1	1	1	
33	5TG–11395–00	HOLDER	1	1	1	1	1	
34	95827–06014	BOLT, FLANGE	1	1	1	1	1	
35	5TA–11311–02	CYLINDER 1	1	1	1	1	1	

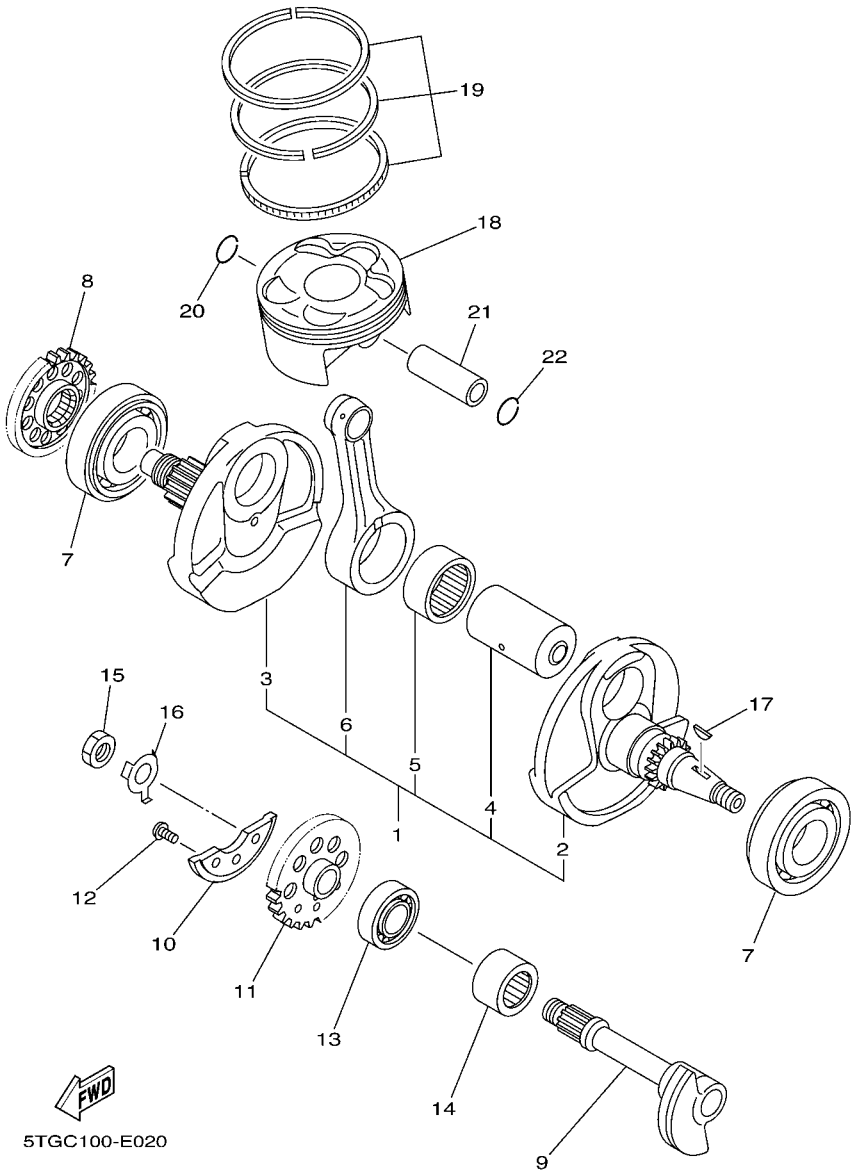

FIG. 2 CRANKSHAFT & PISTON

REF. NO.	PART NO.	DESCRIPTION	USA	CAN	EUR	OCE	JPN	REMARKS
1	5TG–11400–10	CRANKSHAFT ASSY	1	1	1	1	1	
2	5TG–11412–10	.CRANK 1	1	1	1	1	1	
3	5TG–11422–10	.CRANK 2	1	1	1	1	1	
4	5TG–11681–00	.PIN, CRANK 1	1	1	1	1	1	
5	93310–63437	.BEARING	1	1	1	1	1	
6	5TG–11651–10	.ROD, CONNECTING	1	1	1	1	1	
7	93306–30633	BEARING	2	2	2	2	2	
8	5TA–11536–00	GEAR, DRIVE	1	1	1	1	1	
9	5TA–11455–11	SHAFT 1	1	1	1	1	1	
10	5BE–11454–00	WEIGHT 1	1	1	1	1	1	
11	5TA–11531–01	GEAR, BALANCE WEIGHT	1	1	1	1	1	
12	90149–06250	SCREW	3	3	3	3	3	
13	93306–20335	BEARING	1	1	1	1	1	
14	93311–62574	BEARING	1	1	1	1	1	
15	90170–14171	NUT	1	1	1	1	1	
16	90215–14287	WASHER, LOCK	1	1	1	1	1	
17	90280–03006	KEY, WOODRUFF	1	1	1	1	1	
18	5TG–11631–10	PISTON (STD)	1	1	1	1	1	
19	5TG–11603–00	PISTON RING SET (STD)	1	1	1	1	1	
20	93450–22027	CIRCLIP	1	1	1	1	1	
21	5TG–11633–10	PIN, PISTON	1	1	1	1	1	
22	93450–22027	CIRCLIP	1	1	1	1	1	

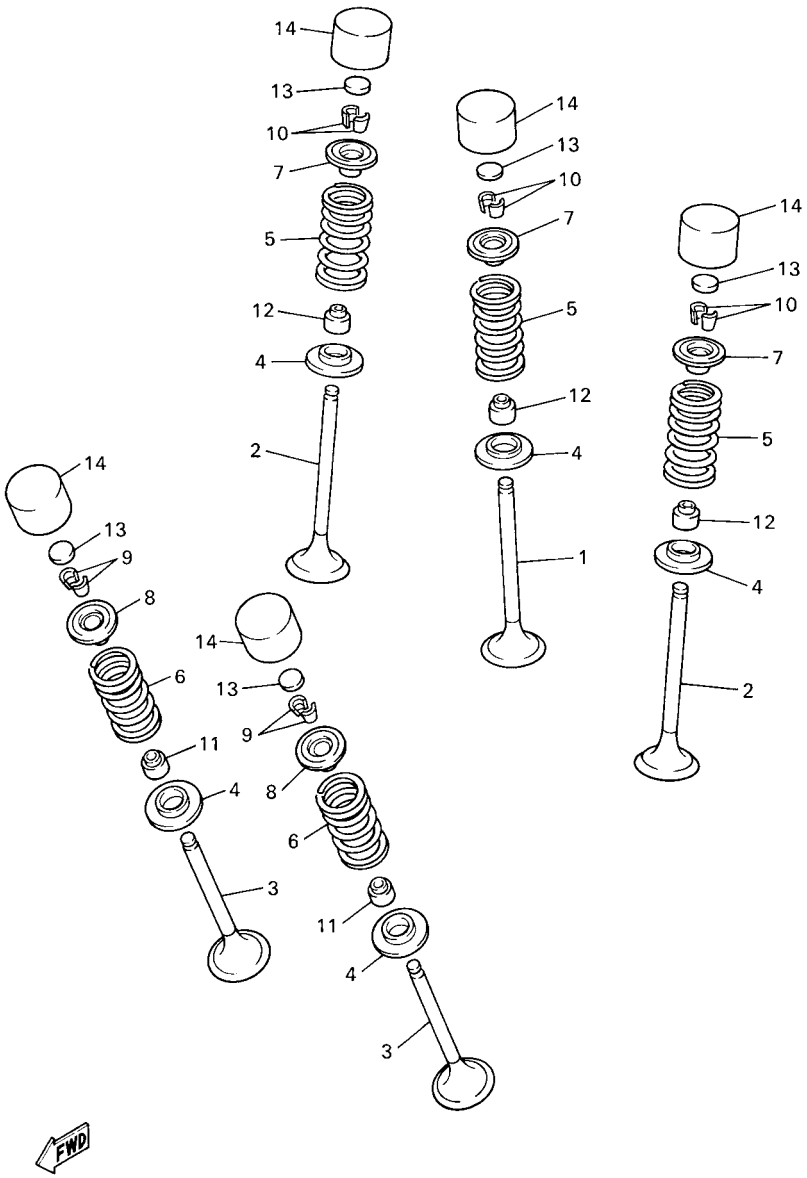

5BE100-8030

FIG. 3 VALVE

REF. NO.	PART NO.	DESCRIPTION	USA	CAN	EUR	OCE	JPN	REMARKS
1	5TA–12111–00	VALVE, INTAKE	1	1	1	1	1	
2	5TA–12112–00	VALVE, INTAKE 2	2	2	2	2	2	
3	5TA–12121–00	VALVE, EXHAUST	2	2	2	2	2	
4	3GM–12126–00	SEAT, VALVE SPRING 2	5	5	5	5	5	
5	5TA–12113–00	SPRING, VALVE INNER	3	3	3	3	3	
6	5TA–12114–00	SPRING, VALVE OUTER	2	2	2	2	2	
7	5BE–12117–00	RETAINER, VALVE SPRING	3	3	3	3	3	
8	4GY–12117–00	RETAINER, VALVE SPRING	2	2	2	2	2	
9	1AA–12118–00	COTTER, VALVE	4	4	4	4	4	
10	1WG–12118–00	COTTER, VALVE	6	6	6	6	6	
11	33M–12119–00	SEAL, VALVE STEM	2	2	2	2	2	
12	4SV–12119–00	SEAL, VALVE STEM	3	3	3	3	3	
13	3LD–12168–00	PAD, ADJUSTING (1.20)	5	5	5	5	5	UR
	3LD–12168–20	PAD, ADJUSTING (1.25)	5	5	5	5	5	UR
	3LD–12168–40	PAD, ADJUSTING (1.30)	5	5	5	5	5	UR
	3LD–12168–60	PAD, ADJUSTING (1.35)	5	5	5	5	5	UR
	3LD–12168–80	PAD, ADJUSTING (1.40)	5	5	5	5	5	UR
	3LD–12168–A0	PAD, ADJUSTING (1.45)	5	5	5	5	5	UR
	3LD–12168–F0	PAD, ADJUSTING (1.50)	5	5	5	5	5	UR
	3LD–12168–H1	PAD, ADJUSTING (1.55)	5	5	5	5	5	UR
	3LD–12168–K1	PAD, ADJUSTING (1.60)	5	5	5	5	5	UR
	3LD–12168–M1	PAD, ADJUSTING (1.65)	5	5	5	5	5	UR
	3LD–12168–R1	PAD, ADJUSTING (1.70)	5	5	5	5	5	UR
	3LD–12168–U1	PAD, ADJUSTING (1.75)	5	5	5	5	5	UR
	3LD–12168–W1	PAD, ADJUSTING (1.80)	5	5	5	5	5	UR
	3LD–12168–Y1	PAD, ADJUSTING (1.85)	5	5	5	5	5	UR
	3LD–12169–11	PAD, ADJUSTING (1.90)	5	5	5	5	5	UR

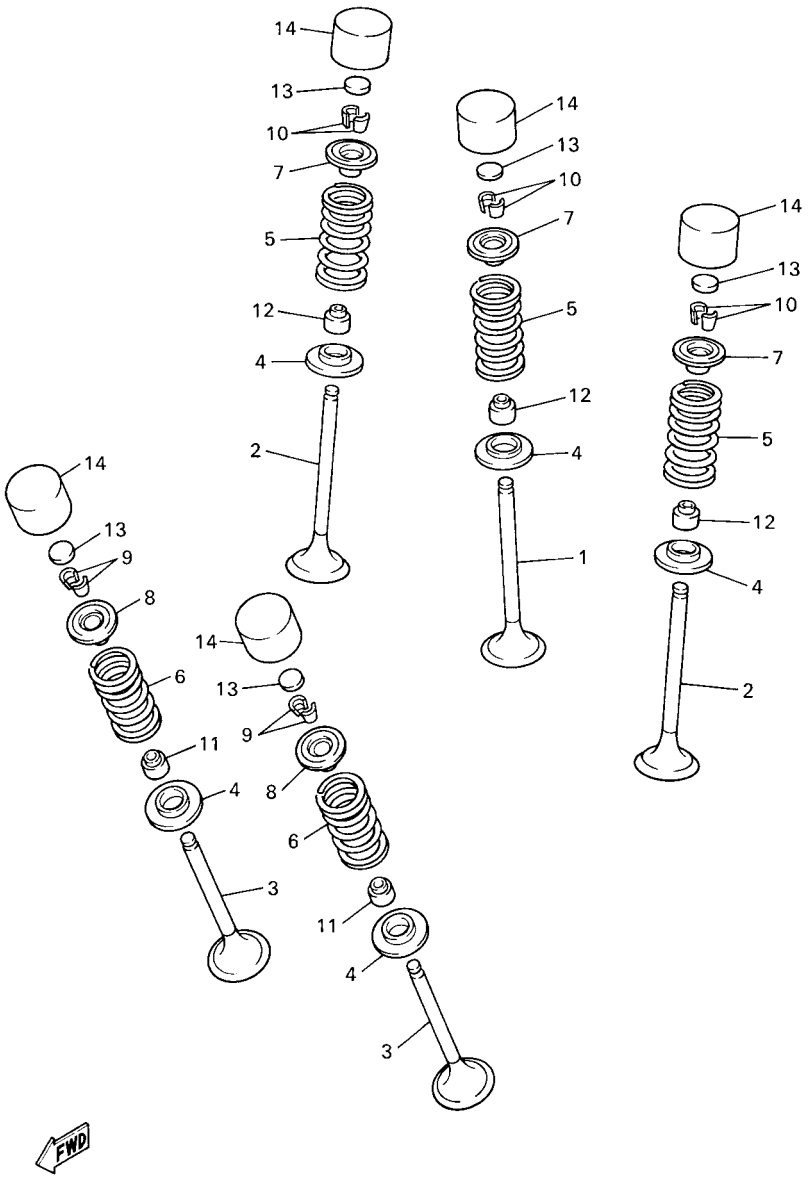

5BE100-8030

FIG. 3 VALVE

REF. NO.	PART NO.	DESCRIPTION	USA	CAN	EUR	OCE	JPN	REMARKS
13	3LD–12169–31	PAD, ADJUSTING (1.95)	5	5	5	5	5	UR
	3LD–12169–50	PAD, ADJUSTING (2.00)	5	5	5	5	5	UR
	3LD–12169–70	PAD, ADJUSTING (2.05)	5	5	5	5	5	UR
	3LD–12169–90	PAD, ADJUSTING (2.10)	5	5	5	5	5	UR
	3LD–12169–E0	PAD, ADJUSTING (2.15)	5	5	5	5	5	UR
	3LD–12169–G0	PAD, ADJUSTING (2.20)	5	5	5	5	5	UR
	3LD–12169–J0	PAD, ADJUSTING (2.25)	5	5	5	5	5	UR
	3LD–12169–L0	PAD, ADJUSTING (2.30)	5	5	5	5	5	UR
	3LD–12169–N0	PAD, ADJUSTING (2.35)	5	5	5	5	5	UR
	3LD–12169–T0	PAD, ADJUSTING (2.40)	5	5	5	5	5	UR
14	3FV–12153–10	LIFTER, VALVE	5	5	5	5	5	YELLOW

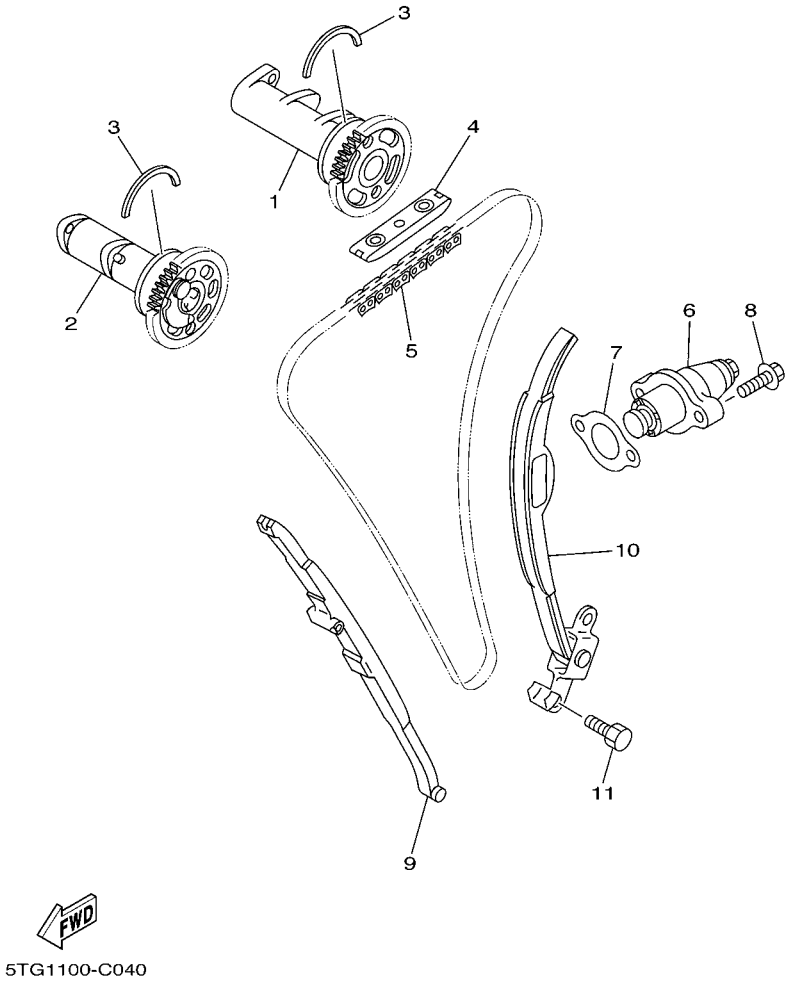

FIG. 4 CAMSHAFT & CHAIN

REF. NO.	PART NO.	DESCRIPTION	USA	CAN	EUR	OCE	JPN	REMARKS
1	5TA–12170–10	CAMSHAFT ASSY 1	1	1	1	1	1	
2	5TG–12180–20	CAMSHAFT ASSY 2	1	1	1	1	1	
3	93440–41178	CIRCLIP	2	2	2	2	2	
4	5BE–12241–00	GUIDE, STOPPER 2	1	1	1	1	1	
5	94591–57118	CHAIN (98XRH2010-118M)	1	1	1	1	1	
6	5TA–12210–00	TENSIONER ASSY, CAM CHAIN	1	1	1	1	1	
7	4FM–12213–00	GASKET, TENSIONER CASE	1	1	1	1	1	
8	95024–06025	BOLT, FLANGE	2	2	2	2	2	
9	5TA–12251–01	DAMPER, CHAIN 1	1	1	1	1	1	
10	5TA–12252–00	DAMPER, CHAIN 2	1	1	1	1	1	
11	5TG–12299–00	BOLT, STOPPER	2	2	2	2	2	

FIG. 5 WATER PUMP

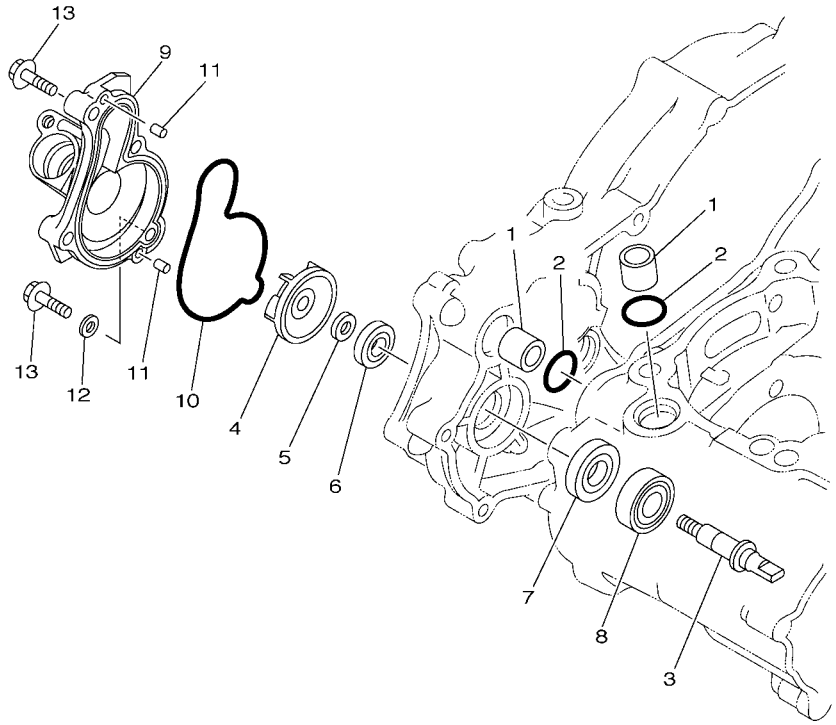

5TG1100-C050

REF. NO.	PART NO.	DESCRIPTION	USA	CAN	EUR	OCE	JPN	REMARKS
1	5BE–12564–00	PIPE, WATER	2	2	2	2	2	
2	93210–19758	O-RING	2	2	2	2	2	
3	5GR–12458–00	SHAFT, IMPELLER	1	1	1	1	1	
4	5DJ–12451–00	IMPELLER, WATER PUMP	1	1	1	1	1	
5	90201–08512	WASHER, PLATE	1	1	1	1	1	
6	93102–11008	OIL SEAL	1	1	1	1	1	
7	93102–12106	OIL SEAL (SD 12-22-5 HS)	1	1	1	1	1	
8	93306–00105	BEARING	1	1	1	1	1	
9	5TG–12422–00	COVER, HOUSING	1	1	1	1	1	
10	5TG–12439–00	O-RING	1	1	1	1	1	
11	93604–10011	PIN, DOWEL	2	2	2	2	2	
12	90430–06014	GASKET	1	1	1	1	1	
13	95024–06030	BOLT, FLANGE	4	4	4	4	4	

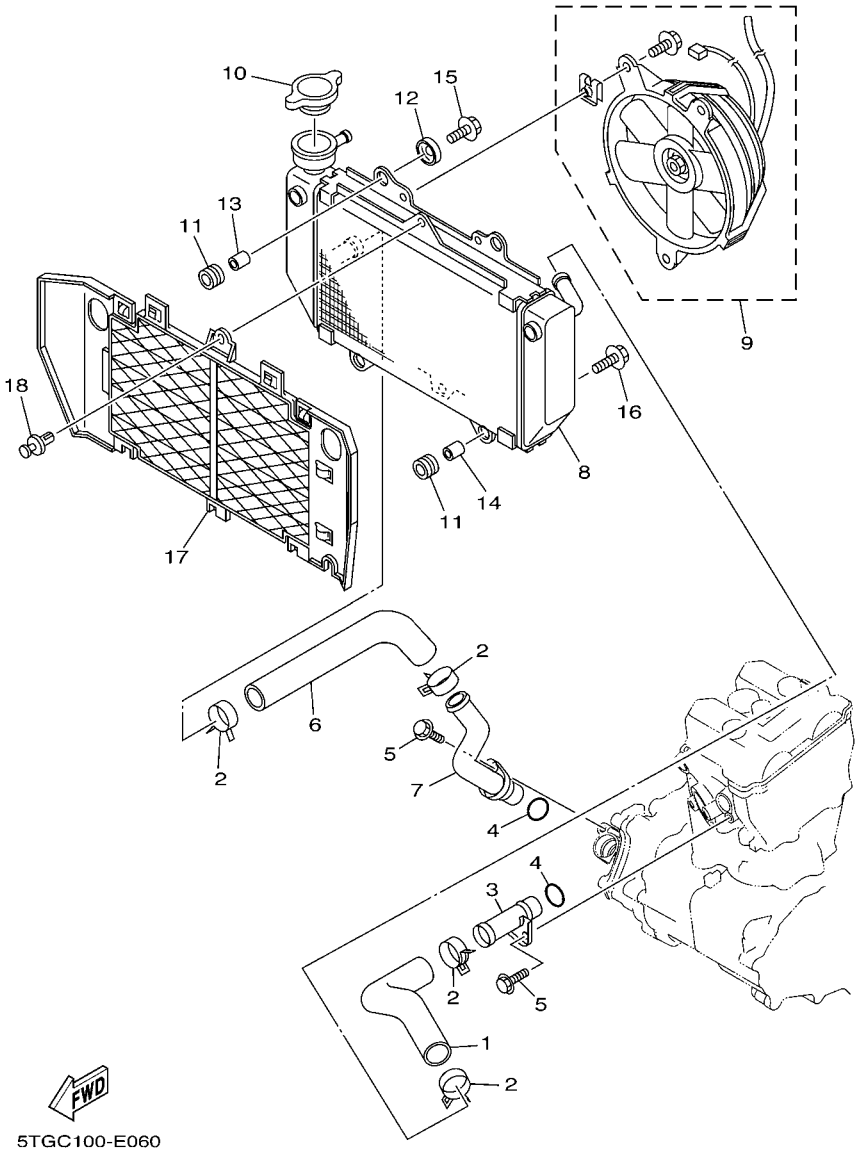

FIG. 6 RADIATOR & HOSE

REF. NO.	PART NO.	DESCRIPTION	USA	CAN	EUR	OCE	JPN	REMARKS
1	5TG–12576–00	HOSE 1	1	1	1	1	1	
2	90467–23109	CLIP	4	4	4	4	4	
3	5TG–12481–00	PIPE 1	1	1	1	1	1	
4	93210–16500	O-RING	2	2	2	2	2	
5	95024–06012	BOLT, FLANGE	2	2	2	2	2	
6	5TG–12577–00	HOSE 2	1	1	1	1	1	
7	5TG–12482–00	PIPE 2	1	1	1	1	1	
8	5TG–12461–10	RADIATOR ASSY	1	1	1	1	1	
9	5TG–12405–00	BLOWER ASSY	1	1	1	1	1	
10	5SL–12462–00	CAP, RADIATOR	1	1	1	1	1	
11	90480–15235	GROMMET	4	4	4	4	4	
12	90209–06174	WASHER	2	2	2	2	2	
13	90387–060A7	COLLAR	2	2	2	2	2	
14	90387–0714B	COLLAR	2	2	2	2	2	
15	95807–06020	BOLT, FLANGE	2	2	2	2	2	
16	95807–06025	BOLT, FLANGE	2	2	2	2	2	
17	5TG–12467–10	COVER, RADIATOR	1	1	1	1	1	
18	90269–07076	RIVET	1	1	1	1	1	

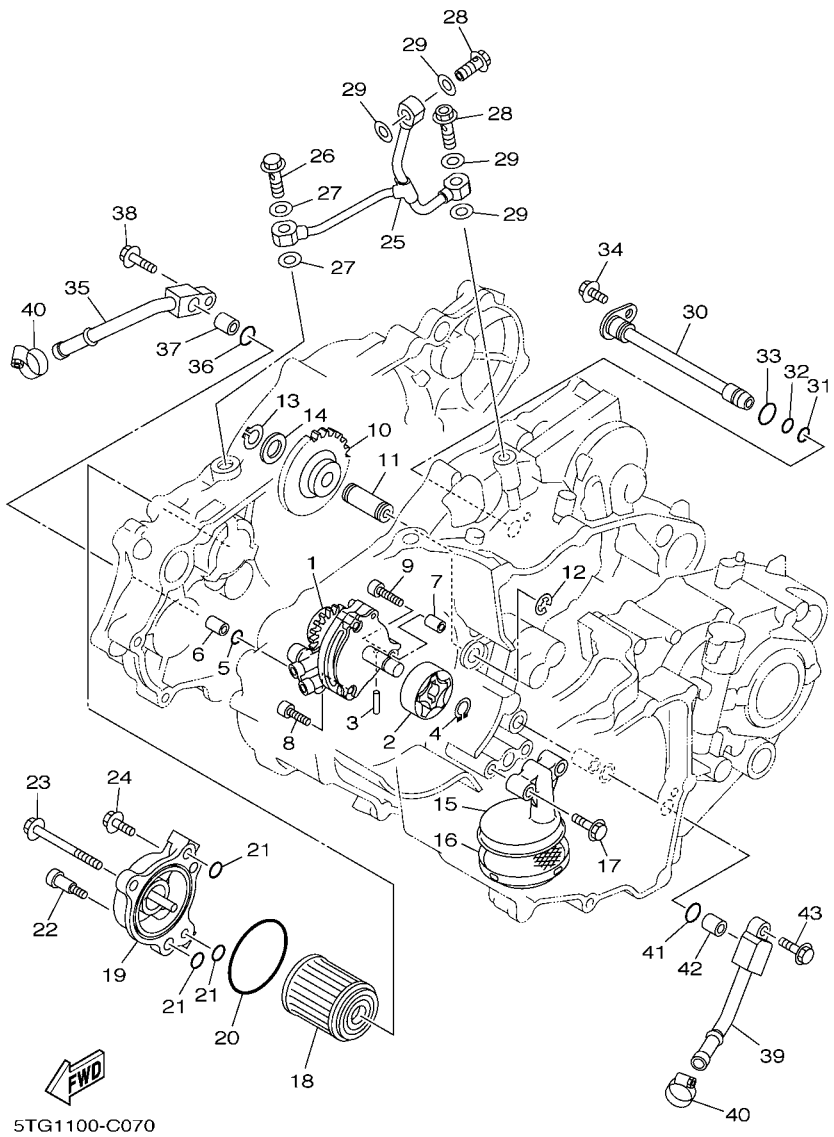

FIG. 7 OIL PUMP

REF. NO.	PART NO.	DESCRIPTION	USA	CAN	EUR	OCE	JPN	REMARKS
1	5TA–13300–00	OIL PUMP ASSY	1	1	1	1	1	
2	5TA–13320–00	ROTOR ASSY 2	1	1	1	1	1	
3	93603–16219	PIN, DOWEL	1	1	1	1	1	
4	93440–10153	CIRCLIP	1	1	1	1	1	
5	93210–10197	O-RING	1	1	1	1	1	
6	99530–10114	PIN, DOWEL	1	1	1	1	1	
7	99530–08012	PIN, DOWEL	1	1	1	1	1	
8	90110–06058	BOLT, HEXAGON SOCKET HEAD	2	2	2	2	2	
9	91314–06030	BOLT	1	1	1	1	1	
10	5TA–13341–00	GEAR, OIL PUMP IDLE	1	1	1	1	1	
11	5BE–13342–00	SHAFT, IDLE GEAR	1	1	1	1	1	
12	99001–08600	CIRCLIP	1	1	1	1	1	
13	99009–12400	CIRCLIP	1	1	1	1	1	
14	90201–12166	WASHER, PLATE	1	1	1	1	1	
15	5TA–13412–00	HOUSING, STRAINER	1	1	1	1	1	
16	5BE–13411–00	STRAINER, OIL	1	1	1	1	1	
17	95027–06025	BOLT, FLANGE	2	2	2	2	2	
18	5TA–13440–00	ELEMENT ASSY, OIL CLEANER	1	1	1	1	1	
19	5BE–13447–10	COVER, OIL ELEMENT	1	1	1	1	1	
20	93210–47675	O-RING	1	1	1	1	1	
21	93210–07135	O-RING	3	3	3	3	3	
22	90110–06188	BOLT, HEXAGON SOCKET HEAD	1	1	1	1	1	
23	91314–06065	BOLT	1	1	1	1	1	
24	91314–06020	BOLT	1	1	1	1	1	
25	5TJ–13161–00	PIPE, DELIVERY 1	1	1	1	1	1	
26	90401–10025	BOLT, UNION	1	1	1	1	1	
27	90430–10188	GASKET	2	2	2	2	2	

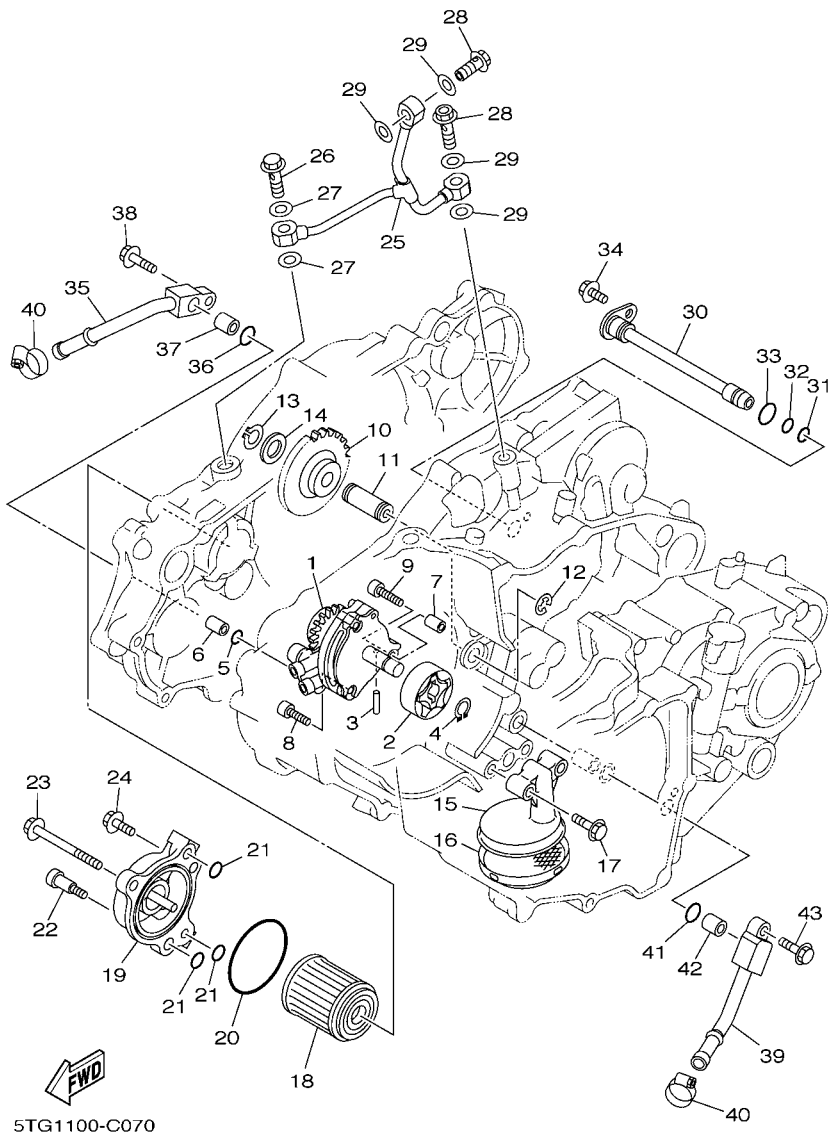

FIG. 7 OIL PUMP

REF. NO.	PART NO.	DESCRIPTION	USA	CAN	EUR	OCE	JPN	REMARKS
28	90401–08176	BOLT, UNION	2	2	2	2	2	
29	90430–08119	GASKET	4	4	4	4	4	
30	5TG–13171–00	PIPE, DELIVERY 2	1	1	1	1	1	
31	93210–07003	O-RING	1	1	1	1	1	
32	93210–09008	O-RING	1	1	1	1	1	
33	93210–12759	O-RING	1	1	1	1	1	
34	95027–06012	BOLT, FLANGE	1	1	1	1	1	
35	5TG–13416–10	PIPE, OIL 1	1	1	1	1	1	
36	93210–10197	O-RING	1	1	1	1	1	
37	99530–10114	PIN, DOWEL	1	1	1	1	1	
38	95024–06025	BOLT, FLANGE	1	1	1	1	1	
39	5TG–13418–10	PIPE, OIL 2	1	1	1	1	1	
40	90450–22017	HOSE CLAMP ASSY	2	2	2	2	2	
41	93210–10197	O-RING	1	1	1	1	1	
42	99530–10114	PIN, DOWEL	1	1	1	1	1	
43	95024–06025	BOLT, FLANGE	1	1	1	1	1	

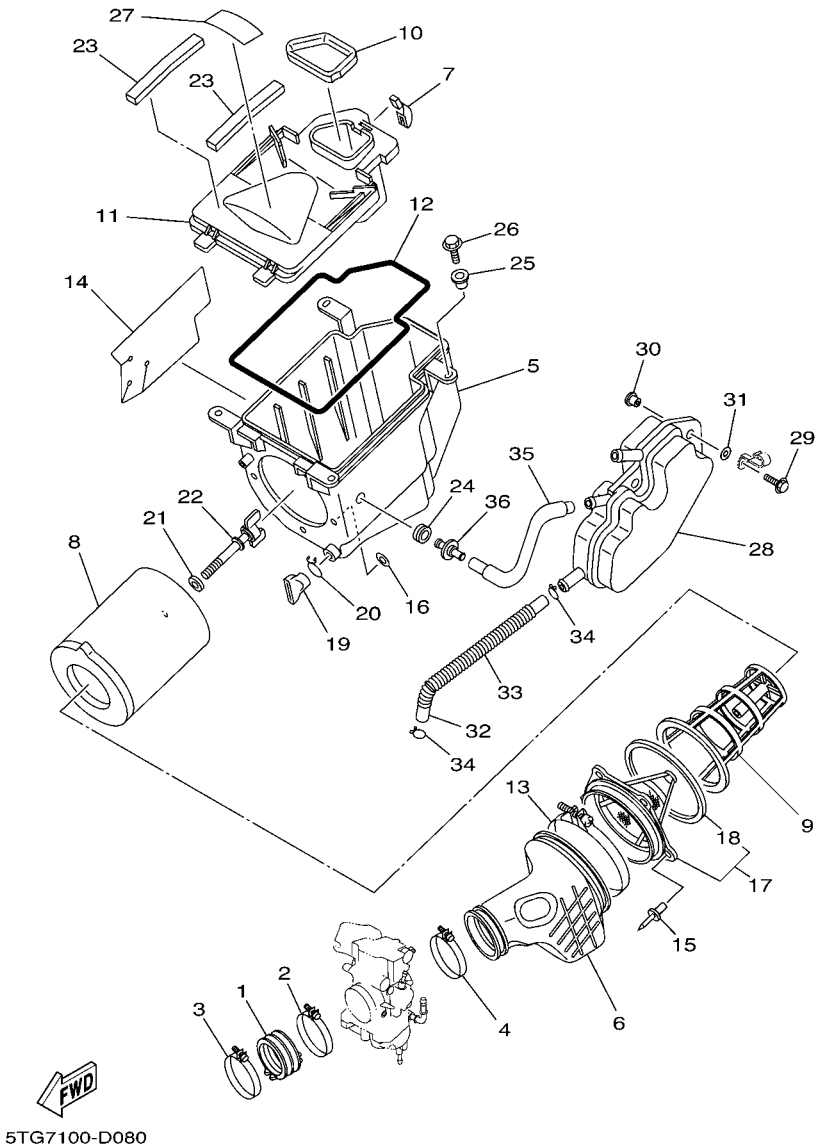

FIG. 8 INTAKE

REF. NO.	PART NO.	DESCRIPTION	USA	CAN	EUR	OCE	JPN	REMARKS
1	5XD–13597–10	JOINT, CARBURETOR 3	1	1	1	1	1	
2	90450–57009	HOSE CLAMP ASSY	1	1	1	1	1	
3	90450–59002	HOSE CLAMP ASSY	1	1	1	1	1	
4	90450–61001	HOSE CLAMP ASSY	1	1	1	1	1	
5	5TG–14411–00	CASE, AIR CLEANER 1	1	1	1	1	1	
6	5TG–14453–00	JOINT, AIR CLEANER 1	1	1	1	1	1	
7	5GH–14436–00	HOOK	3	3	3	3	3	
8	5TG–14451–00	ELEMENT, AIR CLEANER	1	1	1	1	1	
9	5TG–14458–00	GUIDE	1	1	1	1	1	
10	5TG–14479–00	FUNNEL	1	1	1	1	1	
11	5TG–14412–00	CAP, CLEANER CASE 1	1	1	1	1	1	
12	4FU–14452–00	SEAL	1	1	1	1	1	
13	90450–99064	HOSE CLAMP ASSY	1	1	1	1	1	
14	5TG–1442F–00	PROTECTOR	1	1	1	1	1	
15	90267–48138	RIVET, BLIND	5	5	5	5	5	
16	90201–043H7	WASHER, PLATE	5	5	5	5	5	
17	5TG–14459–00	HOLDER, GUIDE	1	1	1	1	1	
18	4ES–14462–00	.SEAL	1	1	1	1	1	
19	59V–14457–00	SEAL	1	1	1	1	1	
20	90467–22080	CLIP	1	1	1	1	1	
21	90209–06096	WASHER	1	1	1	1	1	
22	90122–06002	BOLT, WING	1	1	1	1	1	
23	5TG–14409–00	DAMPER	2	2	2	2	2	
24	31A–14435–00	GROMMET	1	1	1	1	1	
25	90387–08023	COLLAR	4	4	4	4	4	
26	90105–06084	BOLT, FLANGE	4	4	4	4	4	
27	5TG–2177C–00	PLATE, EPA OFFROAD ATV 1	1					

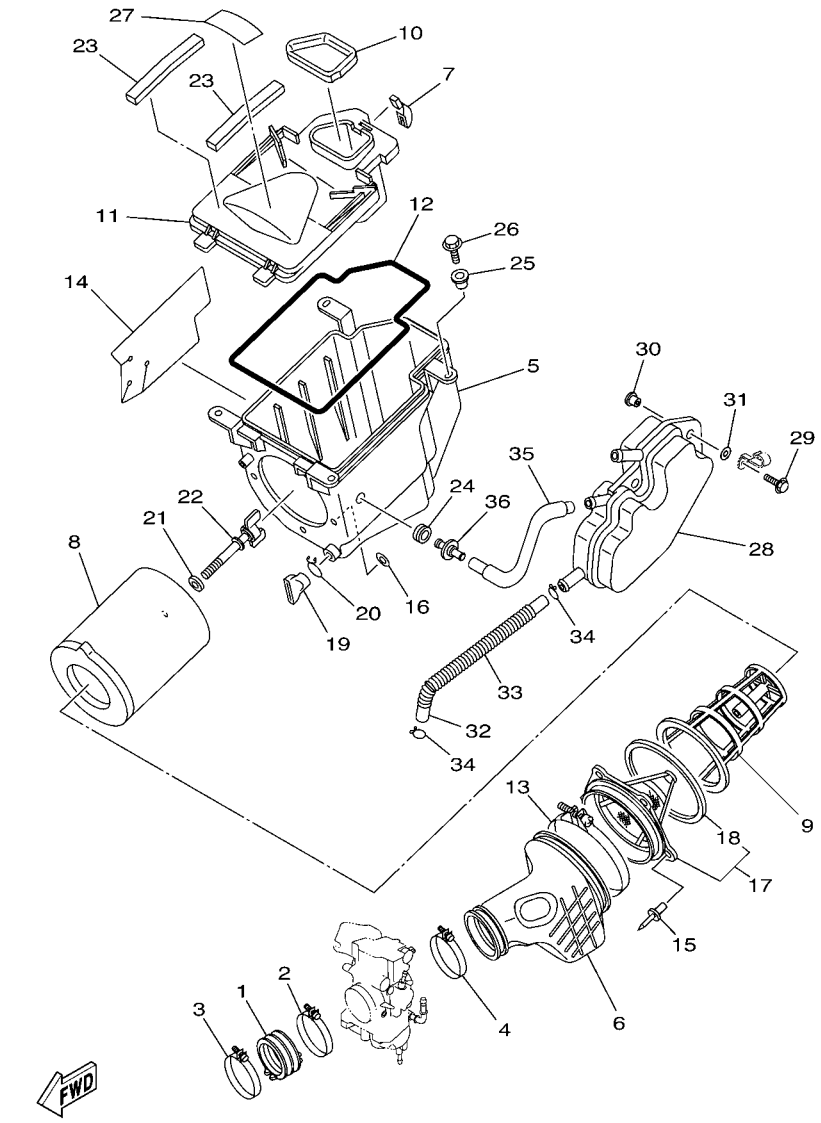

5TG7100-D080

FIG. 8 INTAKE

REF. NO.	PART NO.	DESCRIPTION	USA	CAN	EUR	OCE	JPN	REMARKS
28	5TG–15370–00	BREATHER ASSY	1	1	1	1	1	
29	90105–06084	BOLT, FLANGE	2	2	2	2	2	
30	90387–07789	COLLAR	2	2	2	2	2	
31	90201–06557	WASHER, PLATE	2	2	2	2	2	
32	5TG–1531A–00	HOSE, BREATHER 1	1	1	1	1	1	
33	90501–100A0	SPRING, COMPRESSION	1	1	1	1	1	
34	90467–14015	CLIP	2	2	2	2	2	
35	5TG–1532A–00	HOSE, BREATHER 2	1	1	1	1	1	
36	5TG–14419–00	PIPE	1	1	1	1	1	

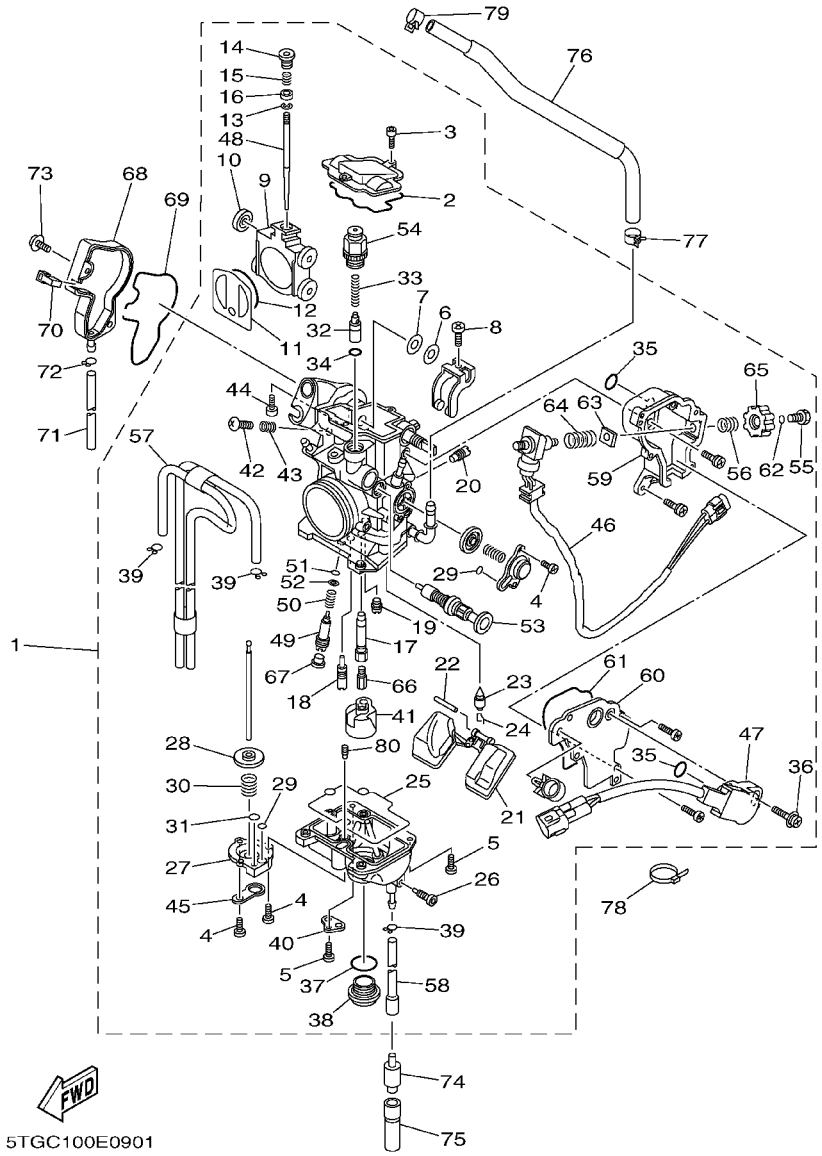

FIG. 9 CARBURETOR

REF. NO.	PART NO.	DESCRIPTION	USA	CAN	EUR	OCE	JPN	REMARKS
1	5TG–14101–31	CARBURETOR ASSY 1	1					
	5TG–14101–21	CARBURETOR ASSY 1		1	1	1	1	
2	5JG–14959–00	.GASKET	1	1	1	1	1	
3	91316–04012	.BOLT	2	2	2	2	2	
4	688–14592–00	.SCREW	5	5	5	5	5	
5	98502–04012	.SCREW, PAN HEAD	4	4	4	4	4	
6	90202–08045	.WASHER, PLATE	1	1	1	1	1	
7	5JG–14951–00	.WASHER	1	1	1	1	1	
8	5JG–14522–00	.SCREW, ADJUST	1	1	1	1	1	
9	5JG–14388–00	.VALVE, VACUUM CONTROL	1	1	1	1	1	
10	3TJ–14267–40	.ROLLER	1	1	1	1	1	
11	5JG–14546–01	.VALVE, NEEDLE	1	1	1	1	1	
12	4FN–14997–00	.SEAL	1	1	1	1	1	
13	3TJ–14159–40	.CLIP	1	1	1	1	1	
14	5JG–14521–00	.SCREW, ADJUST	1	1	1	1	1	
15	5JG–14275–00	.SPRING	1	1	1	1	1	
16	5JG–14264–00	.COLLAR	1	1	1	1	1	
17	5JG–14947–00	.NOZZLE, MAIN	1	1	1	1	1	
18	4MX-14948-06	.JET, SLOW (#48)	1	1	1	1	1	
19	3TJ–1494F–23	.JET (#90)	1	1	1	1	1	
20	5TA–14943–15	.JET, MAIN (#70)	1	1	1	1	1	
21	4SR–14985–00	.FLOAT	1	1	1	1	1	
22	676–14548–00	.PIN, FLOAT ARM	1	1	1	1	1	
23	4MX–14392–00	.VALVE, NEEDLE	1	1	1	1	1	
24	633–14159–00	.CLIP	1	1	1	1	1	
25	5JG–14984–00	.GASKET, FLOAT CHAMBER	1	1	1	1	1	
26	3TJ–14191–40	.PLUG, DRAIN	1	1	1	1	1	

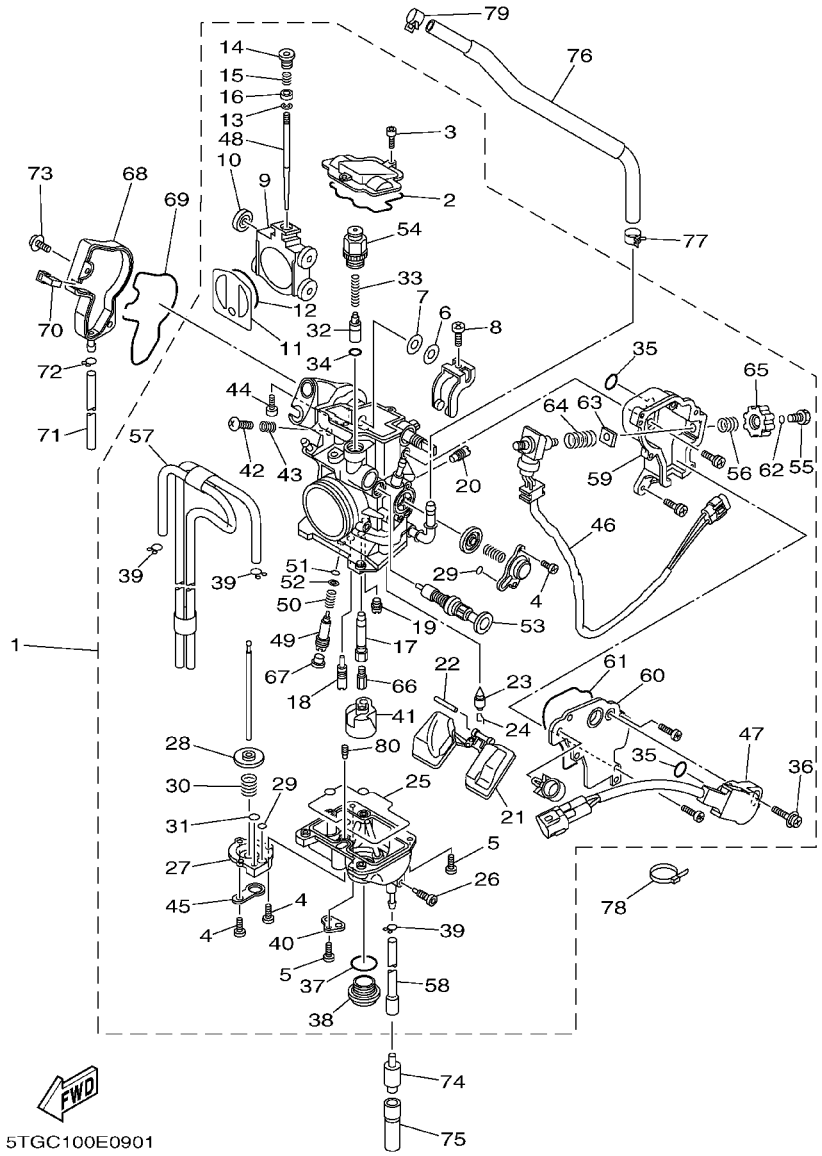

FIG. 9 CARBURETOR

REF. NO.	PART NO.	DESCRIPTION	USA	CAN	EUR	OCE	JPN	REMARKS
27	3TJ–14293–40	.COVER 1	1	1	1	1	1	
28	5JG–14940–17	.DIAPHRAGM ASSY	1	1	1	1	1	
29	3TJ–14536–40	.GASKET	2	2	2	2	2	
30	3TJ–14933–40	.SPRING, DIAPHRAGM	1	1	1	1	1	
31	6H4–14561–00	.O-RING	1	1	1	1	1	
32	5TA–14371–00	.PLUNGER, STARTER	1	1	1	1	1	
33	5TA–14335–00	.SPRING, PLUNGER	1	1	1	1	1	
34	5TA–14997–00	.SEAL	1	1	1	1	1	
35	5NX–14562–00	.O-RING	2	2	2	2	2	
36	5NX–14216–00	.SCREW	1	1	1	1	1	
37	4MX–14561–00	.O-RING	1	1	1	1	1	
38	4MX–14115–00	.PLUG, SCREW	1	1	1	1	1	
39	3TJ–14137–40	.CLIP	3	3	3	3	3	
40	5BE–14146–00	.PLATE	1	1	1	1	1	
41	5JG–14346–00	.PLATE	1	1	1	1	1	
42	5JG–14565–00	.SCREW	1	1	1	1	1	
43	5JG–14531–00	.SPRING, ADJUST SCREW	1	1	1	1	1	
44	5JG–14591–00	.SCREW	1	1	1	1	1	
45	5PA–14146–00	.PLATE	1	1	1	1	1	
46	5TG–8259A–00	.SWITCH, CARBURETOR	1	1	1	1	1	
47	5TG–85885–00	.THROTTLE SENSOR ASSY	1	1	1	1	1	
48	5TG–14916–GR	.NEEDLE	1					
	5BE–14916–DR	.NEEDLE (#DVR)		1	1	1	1	
49	3TJ–14923–40	.SCREW, PILOT	1	1	1	1	1	
50	3TJ–14160–40	.COIL, SPRING	1	1	1	1	1	
51	3TJ–14562–40	.O-RING	1	1	1	1	1	
52	3TJ–14952–40	.WASHER	1	1	1	1	1	
53	5TG–14171–00	.PLUNGER, STARTER	1	1	1	1	1	

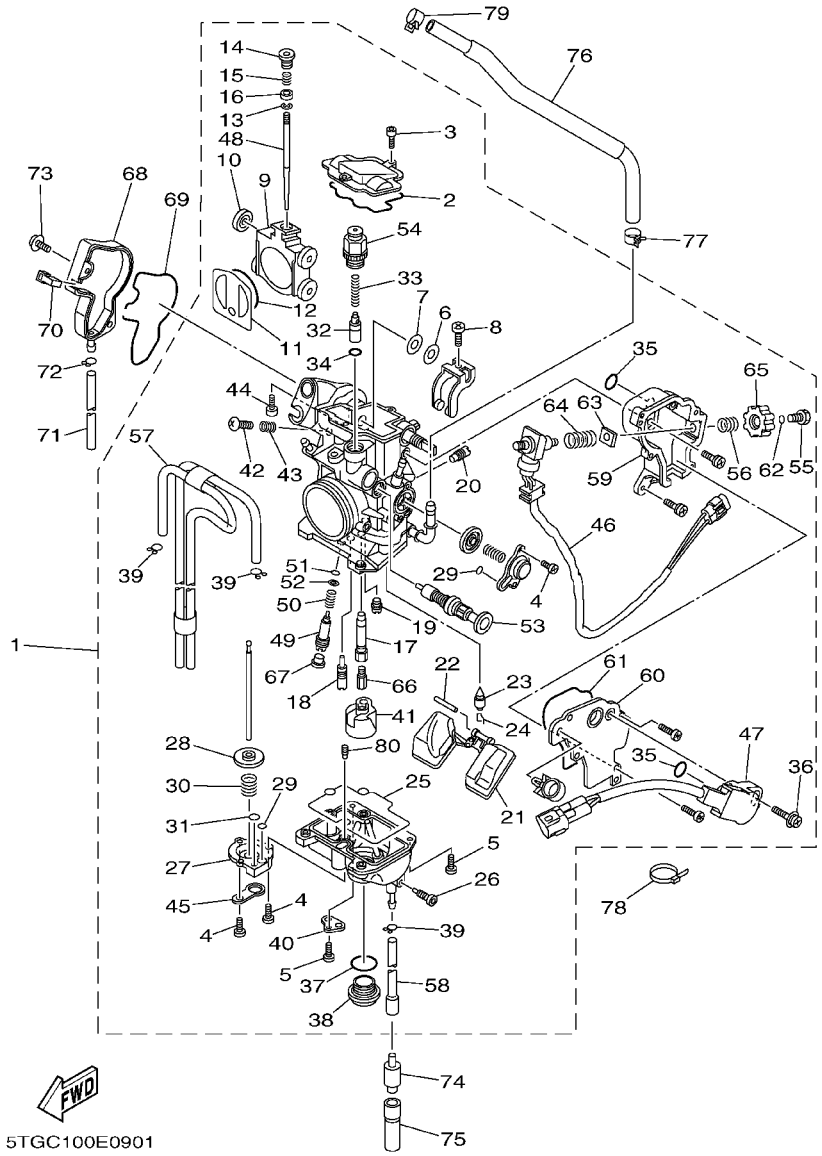

FIG. 9 CARBURETOR

REF. NO.	PART NO.	DESCRIPTION	USA	CAN	EUR	OCE	JPN	REMARKS
54	5TG–14225–00	.CAP	1	1	1	1	1	
55	5TG–14591–00	.SCREW	1	1	1	1	1	
56	5TG–14935–00	.SPRING	1	1	1	1	1	
57	5TG–14197–00	.PIPE	1	1	1	1	1	
58	5TG–14987–00	.HOSE	1	1	1	1	1	
59	5TG–14417–00	.COVER 1	1	1	1	1	1	
60	5TG–14418–00	.COVER 2	1	1	1	1	1	
61	5TG–14959–00	.GASKET	1	1	1	1	1	
62	5TG–14561–00	.O-RING	1	1	1	1	1	
63	5TG–14255–00	.PLATE	1	1	1	1	1	
64	5TG–14335–00	.SPRING, PLUNGER	1	1	1	1	1	
65	5TG–14261–00	.HOLDER	1	1	1	1	1	
66	4MX–14943–38	.JET, MAIN (#155)	1	1	1	1	1	
67	5TJ–14118–00	.CAP	1					
68	5TA–14293–00	COVER 1	1	1	1	1	1	
69	5TA–14227–00	GASKET	1	1	1	1	1	
70	5TA–14239–00	SEAL	1	1	1	1	1	
71	5TA–14987–00	HOSE	1	1	1	1	1	
72	3TJ–14137–40	CLIP	1	1	1	1	1	
73	5TA–14428–00	BOLT	2	2	2	2	2	
74	24W–14193–00	PIPE	1	1	1	1	1	
75	91A20–07004	TUBE, FLEXIBLE VINYL	1	1	1	1	1	
76	5TG–24311–10	PIPE, FUEL 1	1	1	1	1	1	
77	90467–12053	CLIP	1	1	1	1	1	
78	90464–13133	CLAMP	1	1	1	1	1	
79	90467–10038	CLIP	1	1	1	1	1	
80	4JT–1494F–03	.JET (#40)	1	1	1	1	1	

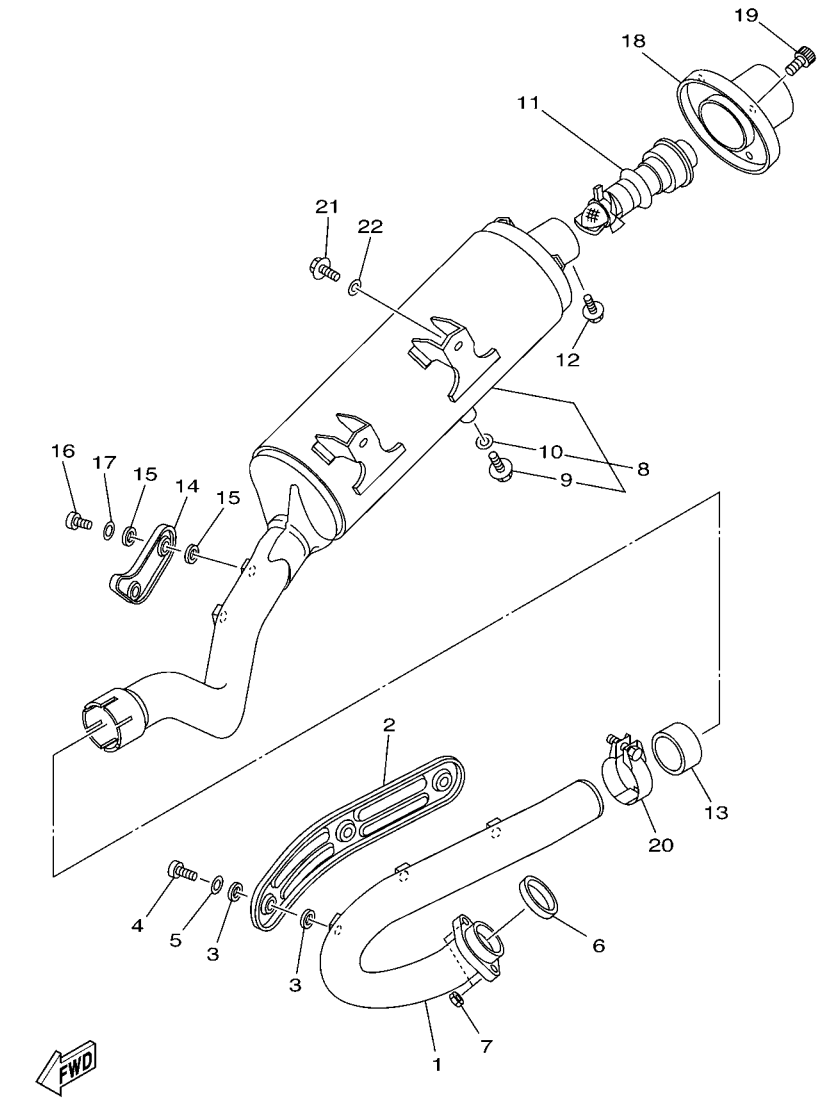

5TGC100-E100

FIG. 10 EXHAUST

REF. NO.	PART NO.	DESCRIPTION	USA	CAN	EUR	OCE	JPN	REMARKS
1	5TG–14611–11	PIPE, EXHAUST 1	1	1	1	1	1	
2	5TG–14628–10	PROTECTOR, EXHAUST PIPE	1	1	1	1	1	
3	90201–05015	WASHER, PLATE	6	6	6	6	6	
4	98980–06010	SCREW, BIND	3	3	3	3	3	
5	92990–06200	WASHER, PLAIN	3	3	3	3	3	
6	3VD–14613–01	GASKET, EXHAUST PIPE	1	1	1	1	1	
7	95704–08500	NUT, FLANGE	2	2	2	2	2	
8	5TG–14711–00	MUFFLER 1	1	1	1	1	1	
9	90105–10147	.BOLT, FLANGE	1	1	1	1	1	
10	92990–10600	.WASHER, PLATE	1	1	1	1	1	
11	5TG–14752–00	PIPE, OUTLET	1	1	1	1	1	
12	95027–06008	BOLT, FLANGE	1	1	1	1	1	
13	8FA–14714–10	GASKET, MUFFLER	1	1	1	1	1	
14	5TG–14718–00	PROTECTOR, MUFFLER 1	1	1	1	1	1	
15	90201–05015	WASHER, PLATE	4	4	4	4	4	
16	90154–06020	SCREW, BINDING	2	2	2	2	2	
17	92907–06200	WASHER	2	2	2	2	2	
18	5TG–14787–00	CAP, SILENCER	1	1	1	1	1	
19	90110–06134	BOLT, HEXAGON SOCKET HEAD	3	3	3	3	3	
20	5BE–14788–00	BAND, SILENCER	1	1	1	1	1	
21	95817–08025	BOLT, FLANGE	2	2	2	2	2	
22	90201–08326	WASHER, PLATE	2	2	2	2	2	

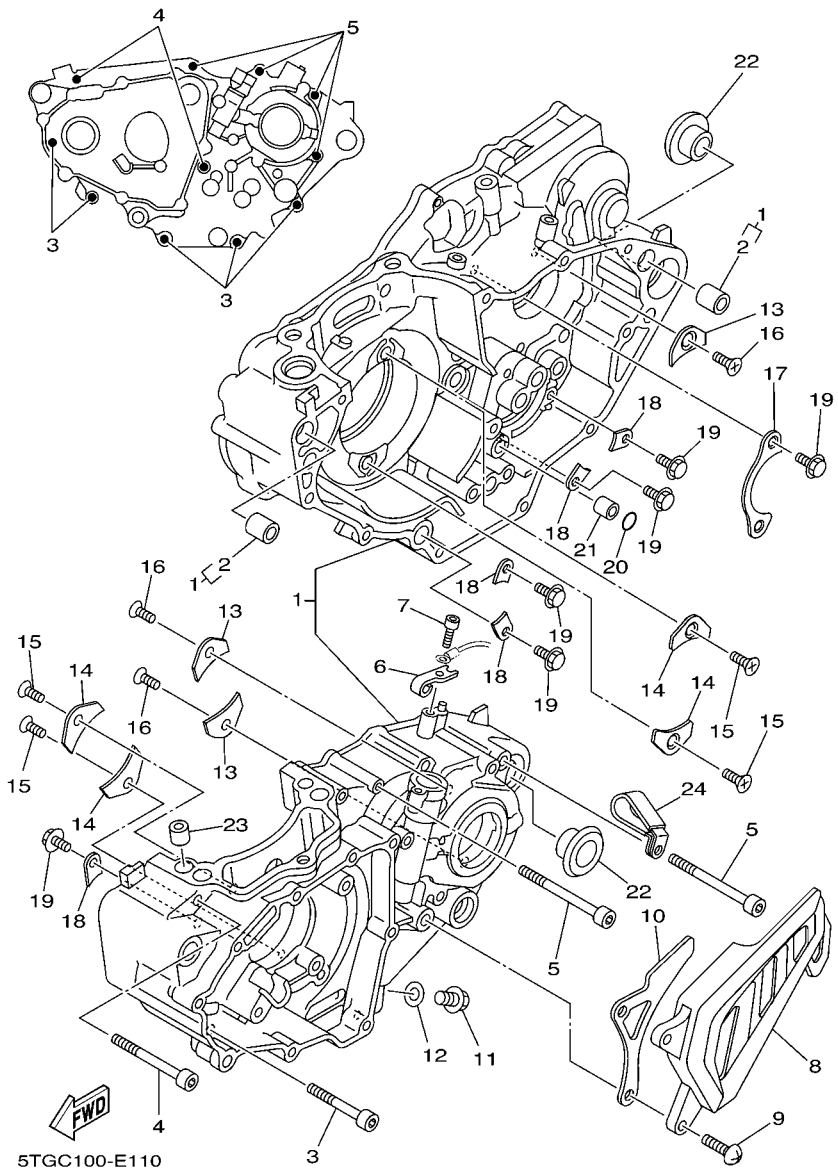

FIG. 11 CRANKCASE

REF. NO.	PART NO.	DESCRIPTION	USA	CAN	EUR	OCE	JPN	REMARKS
1	5TG–15100–01	CRANKCASE ASSY	1	1	1	1	1	
2	99530–14016	.PIN, DOWEL	2	2	2	2	2	
3	91314–06050	BOLT	5	5	5	5	5	
4	91314–06060	BOLT	2	2	2	2	2	
5	91314–06075	BOLT	4	4	4	4	4	
6	5TG–15441–10	HOLDER, CLUTCH CABLE	1	1	1	1	1	
7	91312–06016	BOLT	1	1	1	1	1	
8	5TA–15421–00	COVER, CRANKCASE 2	1	1	1	1	1	
9	98514–06025	SCREW, PAN HEAD	2	2	2	2	2	
10	5TA–17466–00	GUIDE, CHAIN	1	1	1	1	1	
11	95024–10016	BOLT, FLANGE	1	1	1	1	1	
12	90430–10148	GASKET	1	1	1	1	1	
13	4JT–15381–01	PLATE, BEARING COVER	3	3	3	3	3	
14	5BE–15383–01	PLATE, BEARING COVER	4	4	4	4	4	
15	90149–06126	SCREW	4	4	4	4	4	
16	90149–06326	SCREW	3	3	3	3	3	
17	4L0–17471–00	PLATE, COVER	1	1	1	1	1	
18	5DH–18562–00	PLATE, STOPPER 2	5	5	5	5	5	
19	90105–06553	BOLT, FLANGE	7	7	7	7	7	
20	93210–10197	O-RING	1	1	1	1	1	
21	99530–10114	PIN, DOWEL	1	1	1	1	1	
22	90387–164N2	COLLAR	2	2	2	2	2	
23	99530–10116	PIN, DOWEL	2	2	2	2	2	
24	90461–10011	CLAMP	1	1	1	1	1	

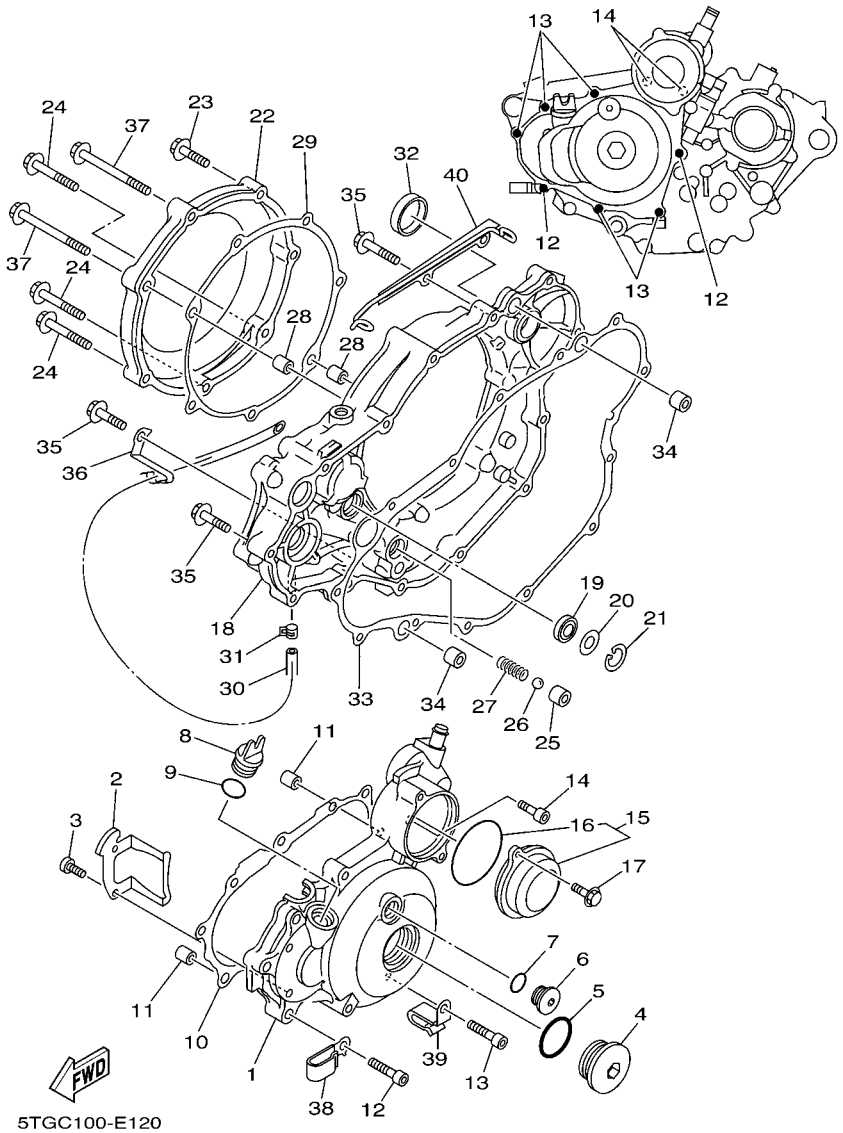

FIG. 12 CRANKCASE COVER 1

REF. NO.	PART NO.	DESCRIPTION	USA	CAN	EUR	OCE	JPN	REMARKS
1	5TG–15411–10	COVER, CRANKCASE 1	1	1	1	1	1	
2	90465–10017	CLAMP	1	1	1	1	1	
3	91317–05012	BOLT	2	2	2	2	2	
4	90340–27003	PLUG, STRAIGHT SCREW	1	1	1	1	1	
5	93210–27370	O-RING	1	1	1	1	1	
6	90340–14003	PLUG, STRAIGHT SCREW	1	1	1	1	1	
7	93210–14369	O-RING	1	1	1	1	1	
8	3Y1–15363–00	PLUG, OIL	1	1	1	1	1	
9	93210–19123	O-RING	1	1	1	1	1	
10	5TG–15451–10	GASKET, CRANKCASE COVER 1	1	1	1	1	1	
11	99530–08016	PIN, DOWEL	2	2	2	2	2	
12	91314–06040	BOLT	2	2	2	2	2	
13	91314–06030	BOLT	5	5	5	5	5	
14	91314–06020	BOLT	2	2	2	2	2	
15	5TG–1549B–10	COVER ASSY 2	1	1	1	1	1	
16	93210–60426	.O-RING	1	1	1	1	1	
17	95024–06016	BOLT, FLANGE	2	2	2	2	2	
18	5TG–15431–10	COVER, CRANKCASE 3	1	1	1	1	1	
19	93101–14164	OIL SEAL	1	1	1	1	1	
20	90201–15701	WASHER, PLATE (T=1.0)	1	1	1	1	1	
21	99009–22500	CIRCLIP	1	1	1	1	1	
22	5TG–15415–00	COVER, GENERATOR	1	1	1	1	1	
23	95024–06030	BOLT, FLANGE	2	2	2	2	2	
24	95024–06040	BOLT, FLANGE	3	3	3	3	3	
25	583–13113–00	SEAT, CHECK BALL	1	1	1	1	1	
26	93503–08007	BALL	1	1	1	1	1	
27	90501–043E0	SPRING, COMPRESSION	1	1	1	1	1	

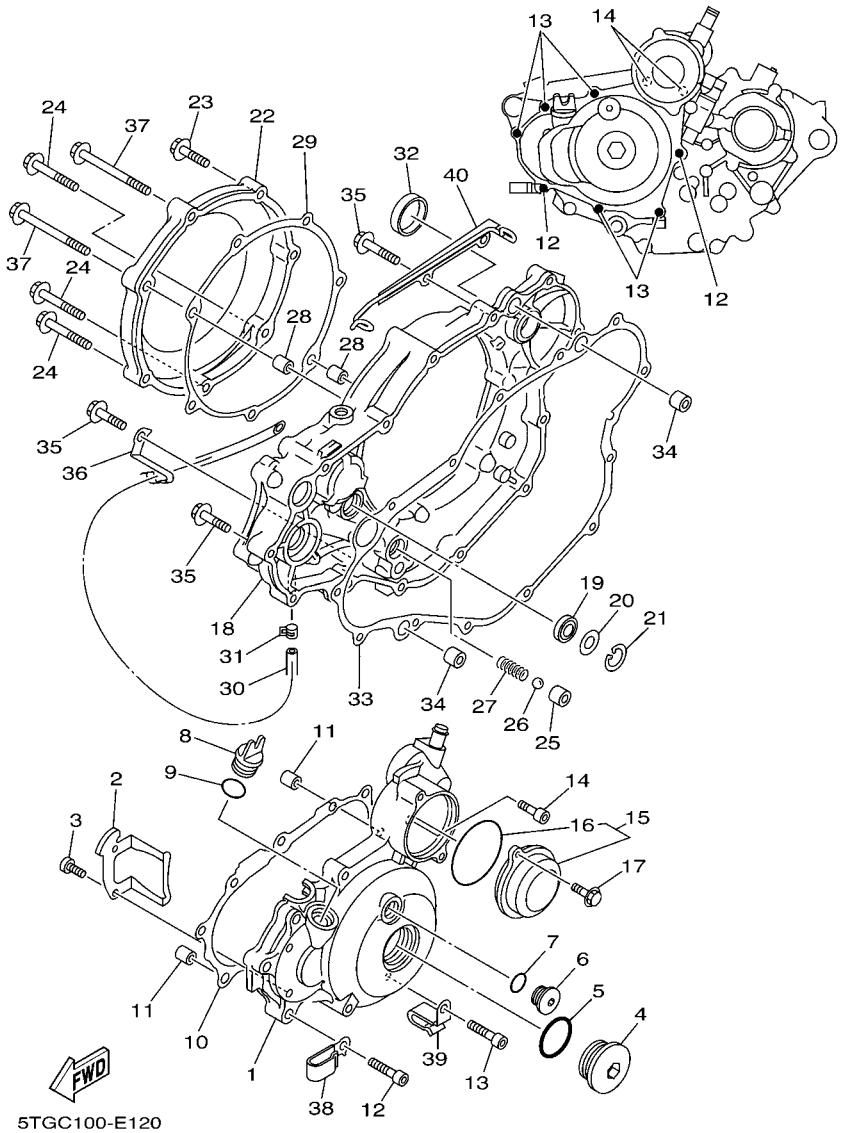

FIG. 12 CRANKCASE COVER 1

REF. NO.	PART NO.	DESCRIPTION	USA	CAN	EUR	OCE	JPN	REMARKS
28	99530–08016	PIN, DOWEL	2	2	2	2	2	
29	5TG–15453–00	GASKET	1	1	1	1	1	
30	90445–07340	HOSE (L310)	1	1	1	1	1	
31	90467–07093	CLIP	1	1	1	1	1	
32	90338–30096	PLUG	1	1	1	1	1	
33	5TG–15462–00	GASKET, CRANKCASE COVER 3	1	1	1	1	1	
34	91812–16001	PIN, DOWEL	2	2	2	2	2	
35	95024–06030	BOLT, FLANGE	10	10	10	10	10	
36	90462–08049	CLAMP	1	1	1	1	1	
37	95024–06080	BOLT, FLANGE	2	2	2	2	2	
38	90462–08044	CLAMP	1	1	1	1	1	
39	90462–10025	CLAMP	1	1	1	1	1	
40	5TG–15484–10	CLAMP 2	1	1	1	1	1	

FIG. 13 STARTER

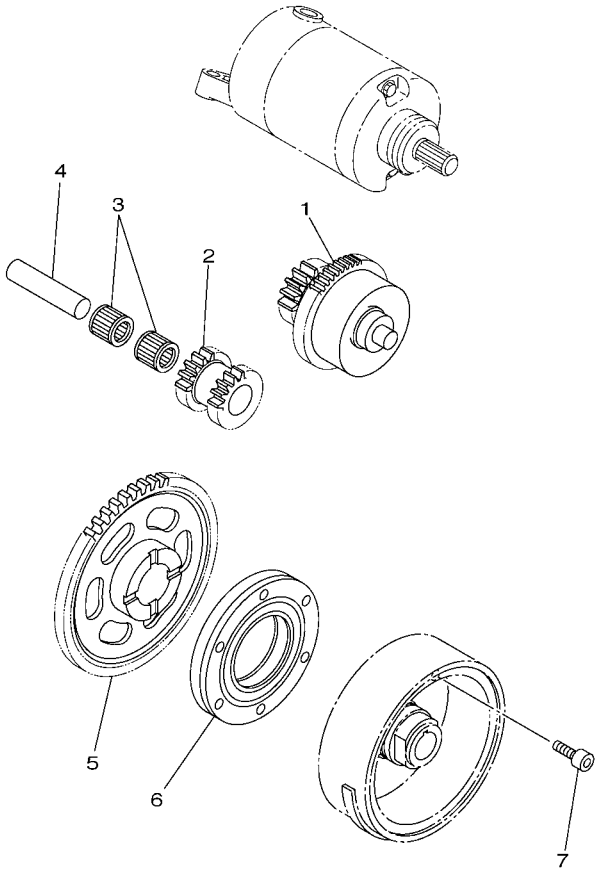

5TG1100-C130

REF. NO.	PART NO.	DESCRIPTION	USA	CAN	EUR	OCE	JPN	REMARKS
1	5TG–15560–00	DAMPER ASSY	1	1	1	1	1	
2	5TG–15517–00	GEAR, IDLER 2	1	1	1	1	1	
3	93310–212L6	BEARING	2	2	2	2	2	
4	5H0–15521–00	SHAFT 1	1	1	1	1	1	
5	5TG–15515–01	GEAR 3	1	1	1	1	1	
6	5TG–15590–00	STARTER ONE-WAY ASSY	1	1	1	1	1	
7	90110–06004	BOLT, HEXAGON SOCKET HEAD	6	6	6	6	6	

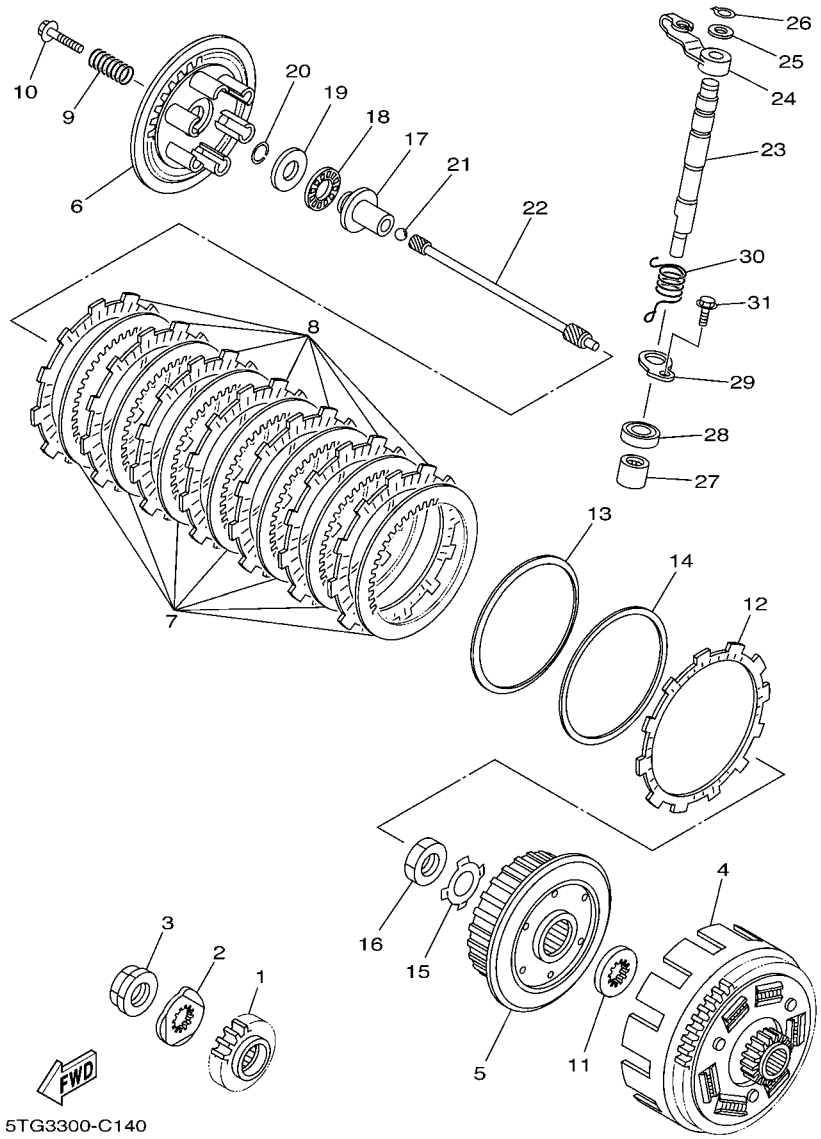

FIG. 14 CLUTCH

REF. NO.	PART NO.	DESCRIPTION	USA	CAN	EUR	OCE	JPN	REMARKS
1	5TG–16111–00	GEAR, PRIMARY DRIVE	1	1	1	1	1	
2	90215–21003	WASHER, LOCK	1	1	1	1	1	
3	90179–20001	NUT	1	1	1	1	1	
4	5TG–16150–00	PRIMARY DRIVEN GEAR COMP.	1	1	1	1	1	
5	5TA–16371–10	BOSS, CLUTCH	1	1	1	1	1	
6	5TG–16351–00	PLATE, PRESSURE 1	1	1	1	1	1	
7	4X7–16325–00	PLATE, CLUTCH 2	7	7	7	7	7	
8	5TG–16321–00	PLATE, FRICTION	7	7	7	7	7	
9	90501–224A8	SPRING, COMPRESSION	6	6	6	6	6	
10	90159–06123	SCREW, WITH WASHER	6	6	6	6	6	
11	2JN–16154–00	PLATE, THRUST 1	1	1	1	1	1	
12	5TG–16331–00	PLATE, FRICTION 2	1	1	1	1	1	
13	5JG–16383–00	SPRING, CLUTCH BOSS	1	1	1	1	1	
14	5JG–16384–00	PLATE, SEAT	1	1	1	1	1	
15	90215–20005	WASHER, LOCK	1	1	1	1	1	
16	90170–20327	NUT	1	1	1	1	1	
17	5TG–16356–00	ROD, PUSH 1	1	1	1	1	1	
18	93340–21505	BEARING	1	1	1	1	1	
19	90201–125L6	WASHER, PLATE	1	1	1	1	1	
20	93440–10085	CIRCLIP	1	1	1	1	1	
21	93515–32029	BALL	1	1	1	1	1	
22	5TG–16357–00	ROD, PUSH 2	1	1	1	1	1	
23	5TG–16382–10	AXLE, PUSH LEVER	1	1	1	1	1	
24	5TG–16342–00	LEVER, PUSH	1	1	1	1	1	
25	90201–10119	WASHER, PLATE	1	1	1	1	1	
26	99009–10400	CIRCLIP	1	1	1	1	1	
27	93317–11287	BEARING	1	1	1	1	1	

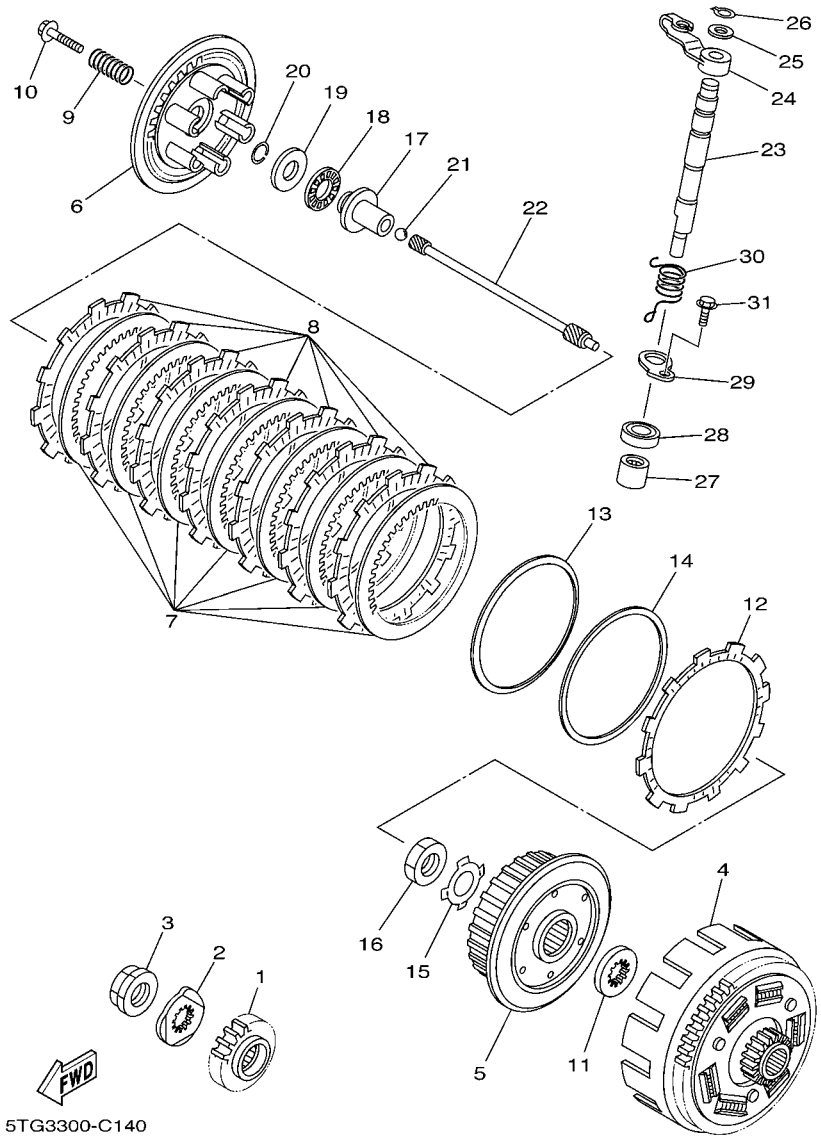

FIG. 14 CLUTCH

REF. NO.	PART NO.	DESCRIPTION	USA	CAN	EUR	OCE	JPN	REMARKS
28	93102–12224	OIL SEAL	1	1	1	1	1	
29	5TA–16384–01	PLATE, SEAT	1	1	1	1	1	
30	90508–16015	SPRING, TORSION	1	1	1	1	1	
31	95024–06012	BOLT, FLANGE	1	1	1	1	1	

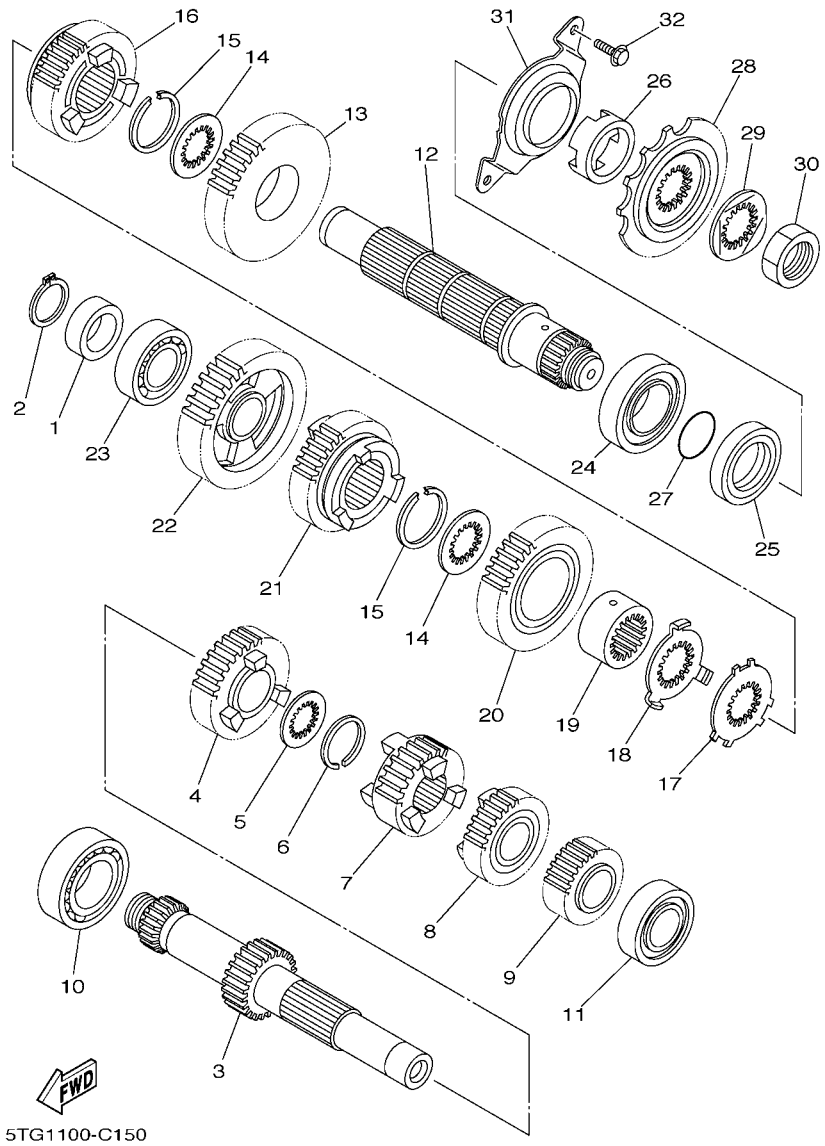

FIG. 15 TRANSMISSION

REF. NO.	PART NO.	DESCRIPTION	USA	CAN	EUR	OCE	JPN	REMARKS
1	90387–204H5	COLLAR	1	1	1	1	1	
2	99009–20400	CIRCLIP	1	1	1	1	1	
3	5TG–17411–00	AXLE, MAIN	1	1	1	1	1	
4	5TG–17151–00	GEAR, 5TH PINION (20T)	1	1	1	1	1	
5	90209–21332	WASHER	1	1	1	1	1	
6	93440–25084	CIRCLIP	1	1	1	1	1	
7	5TG–17131–00	GEAR, 3RD PINION (16T)	1	1	1	1	1	
8	5TG–17141–00	GEAR, 4TH PINION (18T)	1	1	1	1	1	
9	5TG–17121–00	GEAR, 2ND PINION (14T)	1	1	1	1	1	
10	93306–20532	BEARING	1	1	1	1	1	
11	93306–00431	BEARING	1	1	1	1	1	
12	5TG–17402–00	DRIVE AXLE ASSY	1	1	1	1	1	
13	5TG–17221–00	GEAR, 2ND WHEEL (27T)	1	1	1	1	1	
14	90209–25342	WASHER	2	2	2	2	2	
15	93440–28062	CIRCLIP	2	2	2	2	2	
16	5TG–17241–00	GEAR, 4TH WHEEL (23T)	1	1	1	1	1	
17	90209–25349	WASHER	1	1	1	1	1	
18	90209–25350	WASHER	1	1	1	1	1	
19	90387–2810U	COLLAR	1	1	1	1	1	
20	5TG–17231–00	GEAR, 3RD WHEEL (25T)	1	1	1	1	1	
21	5TG–17251–00	GEAR,5TH WHEEL (21T)	1	1	1	1	1	
22	5BF–17211–00	GEAR, 1ST WHEEL (29T)	1	1	1	1	1	
23	93306–00426	BEARING	1	1	1	1	1	
24	93306–20593	BEARING	1	1	1	1	1	
25	93102–32480	OIL SEAL	1	1	1	1	1	
26	90387–2513F	COLLAR	1	1	1	1	1	
27	93210–22164	O-RING	1	1	1	1	1	

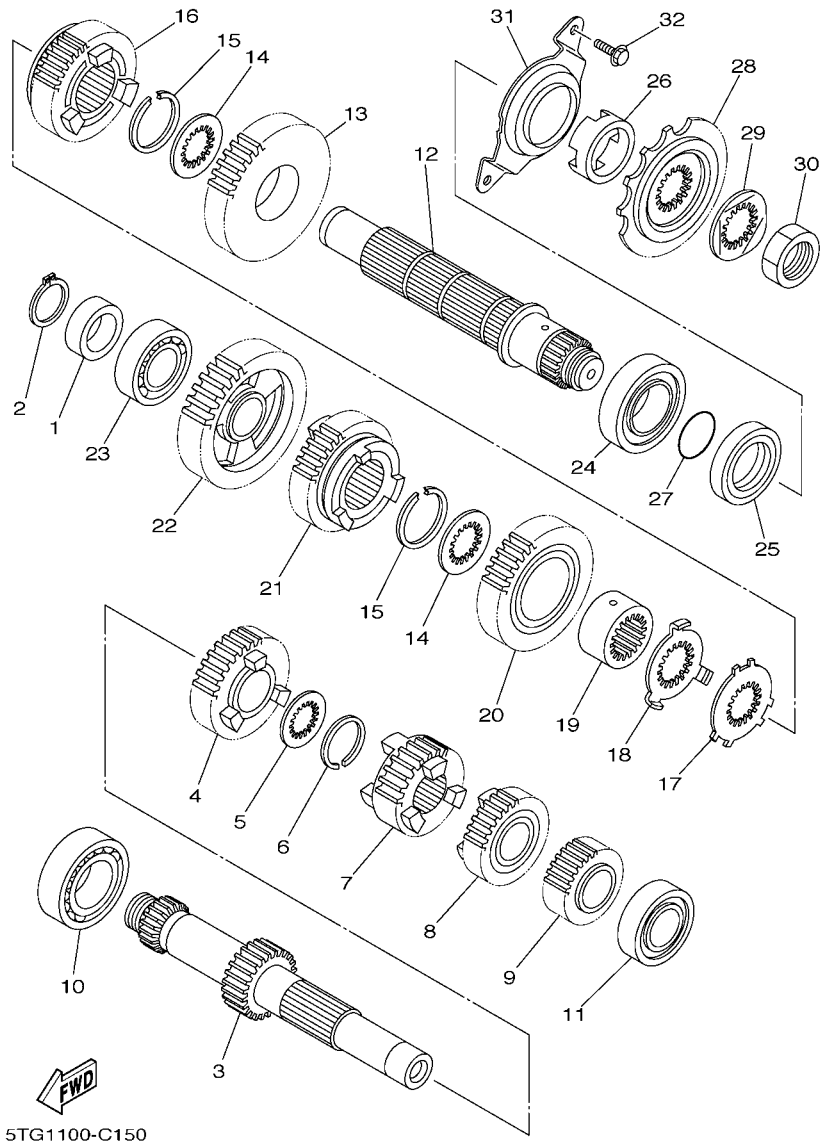

FIG. 15 TRANSMISSION

REF. NO.	PART NO.	DESCRIPTION	USA	CAN	EUR	OCE	JPN	REMARKS
28	5NG–17460–00	SPROCKET, DRIVE (14T)	1	1	1	1	1	
29	90215–21003	WASHER, LOCK	1	1	1	1	1	
30	90179–20001	NUT	1	1	1	1	1	
31	5GR–17471–00	PLATE, COVER	1	1	1	1	1	
32	95024–06016	BOLT, FLANGE	2	2	2	2	2	

FIG. 16 SHIFT CAM & FORK

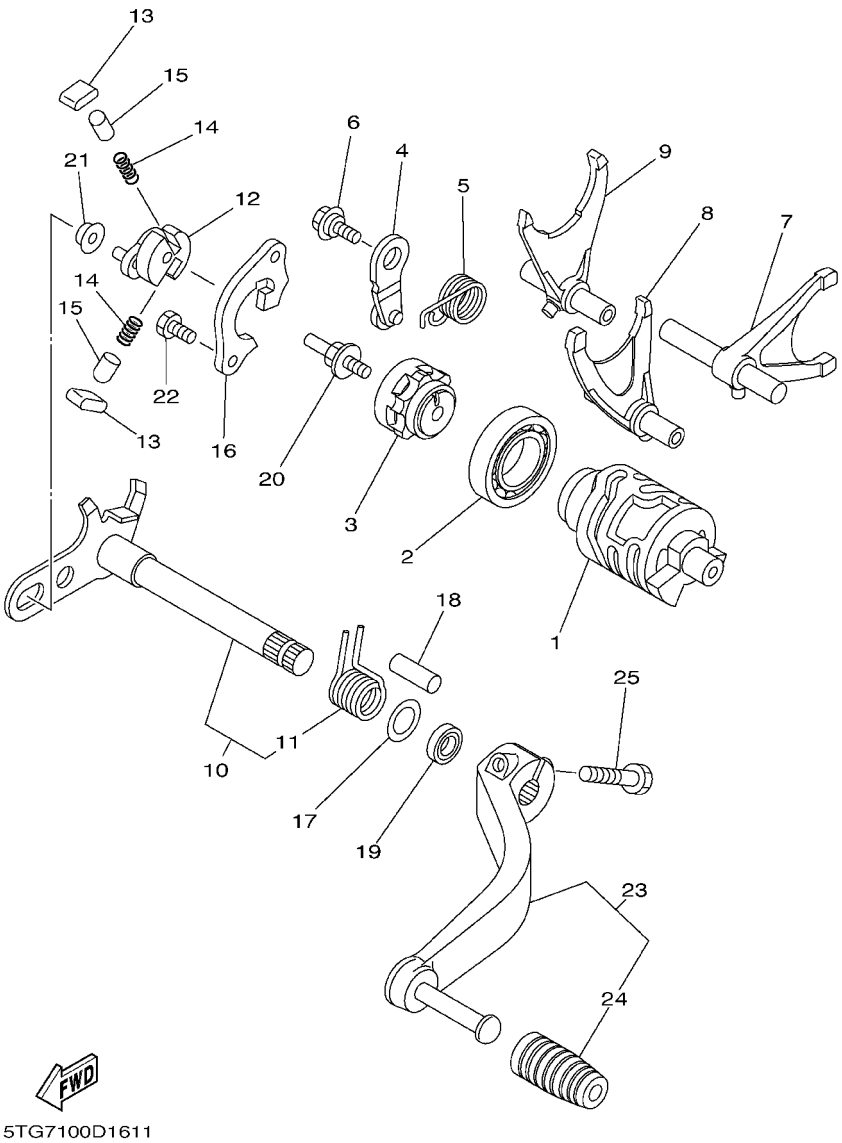

REF. NO.	PART NO.	DESCRIPTION	USA	CAN	EUR	OCE	JPN	REMARKS
1	5TG–18541–00	CAM, SHIFT	1	1	1	1	1	
2	93306–90501	BEARING	1	1	1	1	1	
3	4EW–18185–00	SEGMENT	1	1	1	1	1	
4	3XK–18140–00	STOPPER LEVER ASSY	1	1	1	1	1	
5	90508–26561	SPRING, TORSION	1	1	1	1	1	
6	90109–063F8	BOLT	1	1	1	1	1	
7	5TG–18501–00	FORK, SHIFT 1	1	1	1	1	1	
8	5TG–18502–00	FORK, SHIFT 2	1	1	1	1	1	
9	5TG–18503–00	FORK, SHIFT 3	1	1	1	1	1	
10	5TG–18101–10	SHIFT SHAFT ASSY	1	1	1	1	1	
11	90508–35015	.SPRING, TORSION	1	1	1	1	1	
12	5MW–18122–01	LEVER, SHIFT 2	1	1	1	1	1	
13	3XJ–18182–00	PAWL, SHIFTER	2	2	2	2	2	
14	90501–052G5	SPRING, COMPRESSION	2	2	2	2	2	
15	3XJ–18184–00	PIN, PAWL	2	2	2	2	2	
16	5BE–18172–00	GUIDE, SHIFT	1	1	1	1	1	
17	90201–12166	WASHER, PLATE	1	1	1	1	1	
18	93608–33002	PIN, DOWEL	1	1	1	1	1	
19	93102–12224	OIL SEAL	1	1	1	1	1	
20	3XJ–18173–10	PIN, SHIFT	1	1	1	1	1	
21	3XJ–18178–00	ROLLER, SHIFT LEVER	1	1	1	1	1	
22	90101–06034	BOLT	2	2	2	2	2	
23	5TG–18110–10	SHIFT PEDAL ASSY	1	1	1	1	1	
24	5YT–18113–00	.COVER, SHIFT PEDAL	1	1	1	1	1	
25	90109–06031	BOLT	1	1	1	1	1	

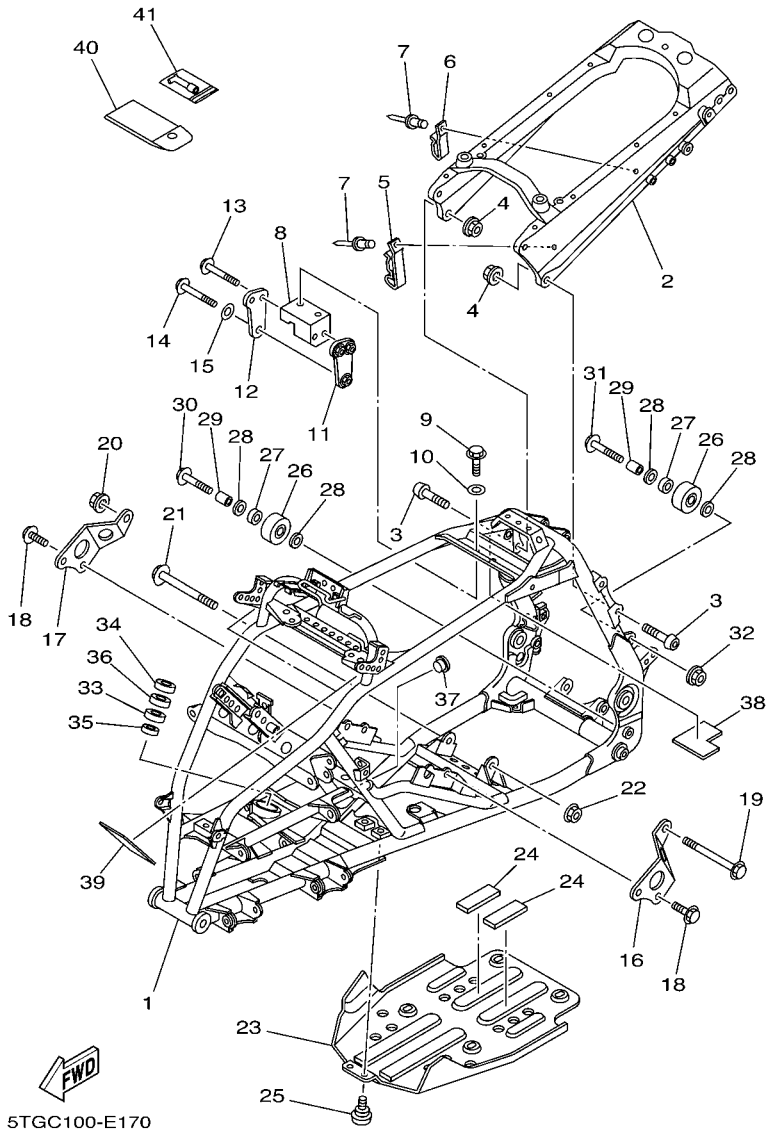

FIG. 17 FRAME

REF. NO.	PART NO.	DESCRIPTION	USA	CAN	EUR	OCE	JPN	REMARKS
1	5TG–21101–49	FRONT FRAME COMP.	1	1	1	1	1	
2	5TG–21190–09	REAR FRAME COMP. (SILVER)	1	1	1	1	1	
3	92017–10030	BOLT, BUTTON HEAD	4	4	4	4	4	
4	90185–10002	NUT, SELF-LOCKING	4	4	4	4	4	
5	90462–12003	CLAMP	1	1	1	1	1	
6	90462–12005	CLAMP	1	1	1	1	1	
7	90267–48088	RIVET, BLIND	2	2	2	2	2	
8	5TG–21315–00	STAY, ENGINE 1	1	1	1	1	1	
9	95812–08020	BOLT, FLANGE	2	2	2	2	2	
10	90201–08053	WASHER, PLATE	2	2	2	2	2	
11	5TG–21318–10	STAY, ENGINE 5	1	1	1	1	1	
12	5TG–21314–10	STAY, ENGINE 5	1	1	1	1	1	
13	95812–08050	BOLT, FLANGE	2	2	2	2	2	
14	95812–10055	BOLT, FLANGE	1	1	1	1	1	
15	90201–10036	WASHER, PLATE	1	1	1	1	1	
16	5TG–21316–00	STAY, ENGINE 2	1	1	1	1	1	
17	5TG–21317–00	STAY, ENGINE 3	1	1	1	1	1	
18	95817–08016	BOLT, FLANGE	4	4	4	4	4	
19	95812–10165	BOLT, FLANGE	1	1	1	1	1	
20	90185–10011	NUT, SELF-LOCKING	1	1	1	1	1	
21	90105–10148	BOLT, FLANGE	1	1	1	1	1	
22	90185–10011	NUT, SELF-LOCKING	1	1	1	1	1	
23	5TG–21471–00	PROTECTOR, ENGINE	1	1	1	1	1	
24	41R–21717–00	DAMPER	2	2	2	2	2	
25	90109–066G1	BOLT	6	6	6	6	6	
26	5TG–22178–00	TENSIONER	2	2	2	2	2	
27	93300–60804	BEARING	2	2	2	2	2	

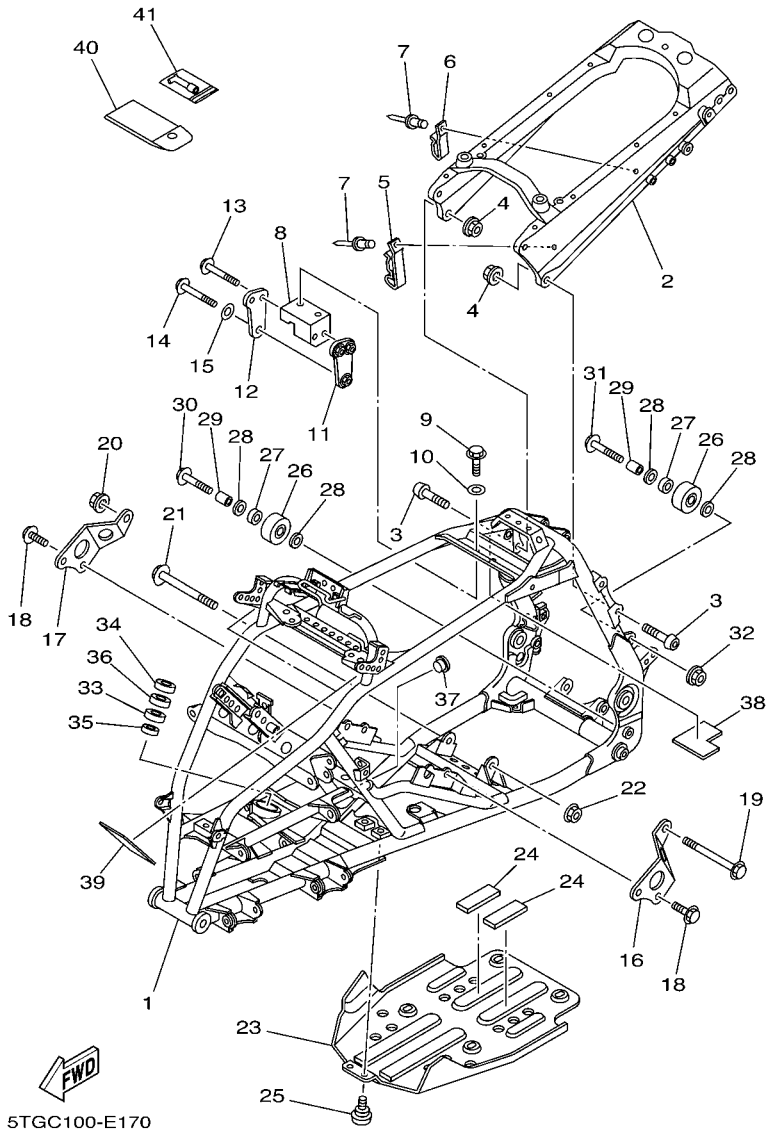

FIG. 17 FRAME

REF. NO.	PART NO.	DESCRIPTION	USA	CAN	EUR	OCE	JPN	REMARKS
28	90201–08043	WASHER, PLATE	4	4	4	4	4	
29	90387–086N4	COLLAR	2	2	2	2	2	
30	95022–08040	BOLT, FLANGE	1	1	1	1	1	
31	90105–08112	BOLT, FLANGE	1	1	1	1	1	
32	95602–08200	NUT, SELF-LOCKING	1	1	1	1	1	
33	93306–20352	BEARING	1	1	1	1	1	
34	93102–25081	OIL SEAL	1	1	1	1	1	
35	93102–25099	OIL SEAL	1	1	1	1	1	
36	5GT–23872–00	HOLDER, BEARING	1	1	1	1	1	
37	90338–18122	PLUG	2	2	2	2	2	
38	5TG–25897–00	DAMPER	1	1	1	1	1	
39	5TG–84163–00	DAMPER	2	2	2	2	2	
40	5TG–28100–10	TOOL KIT	1	1	1	1	1	
41	1NV–2811A–01	GAUGE, AIR	1	1	1	1	1	

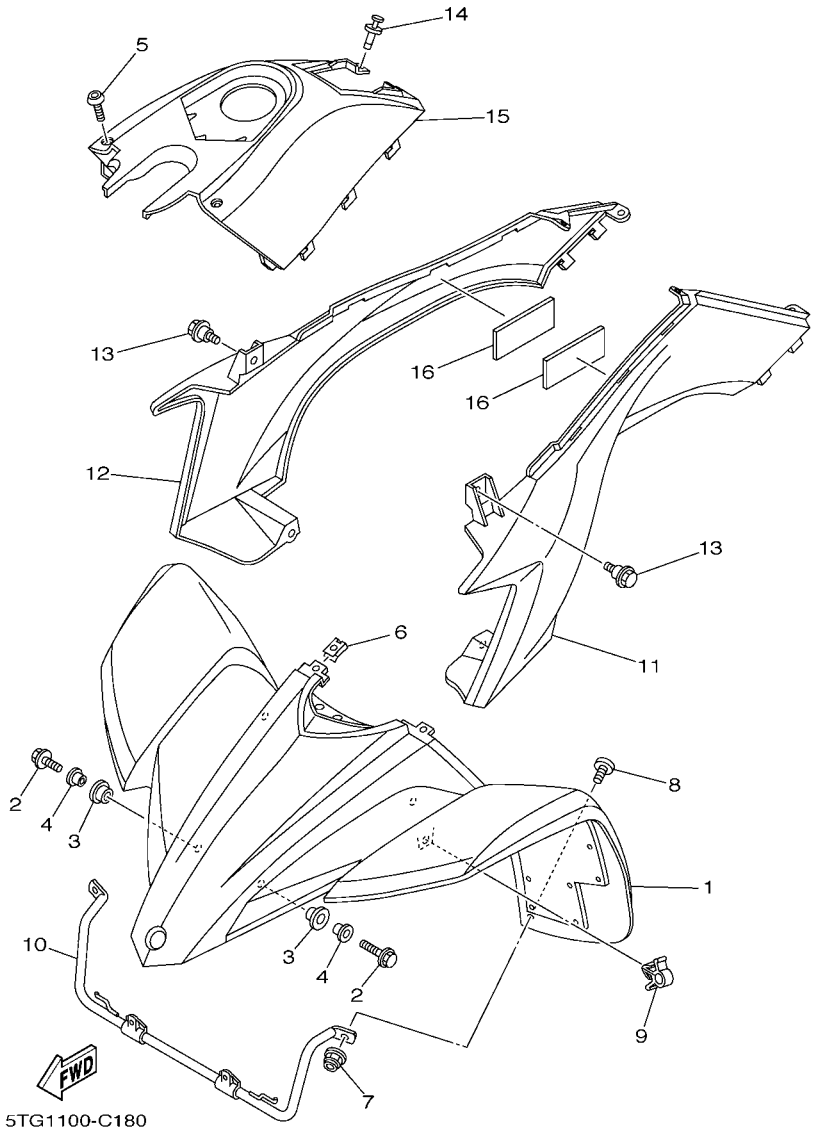

FIG. 18 FRONT FENDER

REF. NO.	PART NO.	DESCRIPTION	USA	CAN	EUR	OCE	JPN	REMARKS
1	5TG–W2151–00	FRONT FENDER COMP.	1					UR FOR DPBSE
	5TG–W2151–10	FRONT FENDER COMP.	1					UR FOR BWS1
	5TG–W215C–00	FRONT FENDER COMP.2		1				UR FOR DPBSE
	5TG–W215C–10	FRONT FENDER COMP.2		1				UR FOR BWS1
	5TG–W215B–00	FRONT FENDER COMP. 2			1			UR FOR DPBSE
	5TG–W215B–10	FRONT FENDER COMP. 2			1			UR FOR BWS1
	5TG–W215D–00	FRONT FENDER COMP. 2				1	1	UR FOR DPBSE
	5TG–W215D–10	FRONT FENDER COMP. 2				1		UR FOR BWS1
2	95807–06016	BOLT, FLANGE	4	4	4	4	4	
3	90480–15006	GROMMET	4	4	4	4	4	
4	90387–062L2	COLLAR	4	4	4	4	4	
5	90110–05201	BOLT, HEXAGON SOCKET HEAD	2	2	2	2	2	
6	90183–05008	NUT, SPRING	2	2	2	2	2	
7	95607–06200	NUT, SELF U-FLANGE	2	2	2	2	2	
8	90111–06038	BOLT,HEX. SOCKET BUTTON	2	2	2	2	2	
9	90464–48174	CLAMP	1	1	1	1	1	
10	5TG–21513–10	STAY, FENDER 1	1	1	1	1	1	
11	5TG–21711–00	COVER, SIDE 1	1	1	1	1	1	UR FOR DPBSE
	5TG–21711–10	COVER, SIDE 1	1	1	1	1		UR FOR BWS1
12	5TG–21721–00	COVER, SIDE 2	1	1	1	1	1	UR FOR DPBSE
	5TG–21721–10	COVER, SIDE 2	1	1	1	1		UR FOR BWS1
13	90109–063F1	BOLT	4	4	4	4	4	
14	90269–06002	RIVET	2	2	2	2	2	
15	5TG–2171A–00	COVER, TOP	1	1	1	1	1	UR FOR DPBSE
	5TG–2171A–10	COVER, TOP	1	1	1	1		UR FOR BWS1
16	5TG–21541–00	DAMPER 1	2	2	2	2	2	

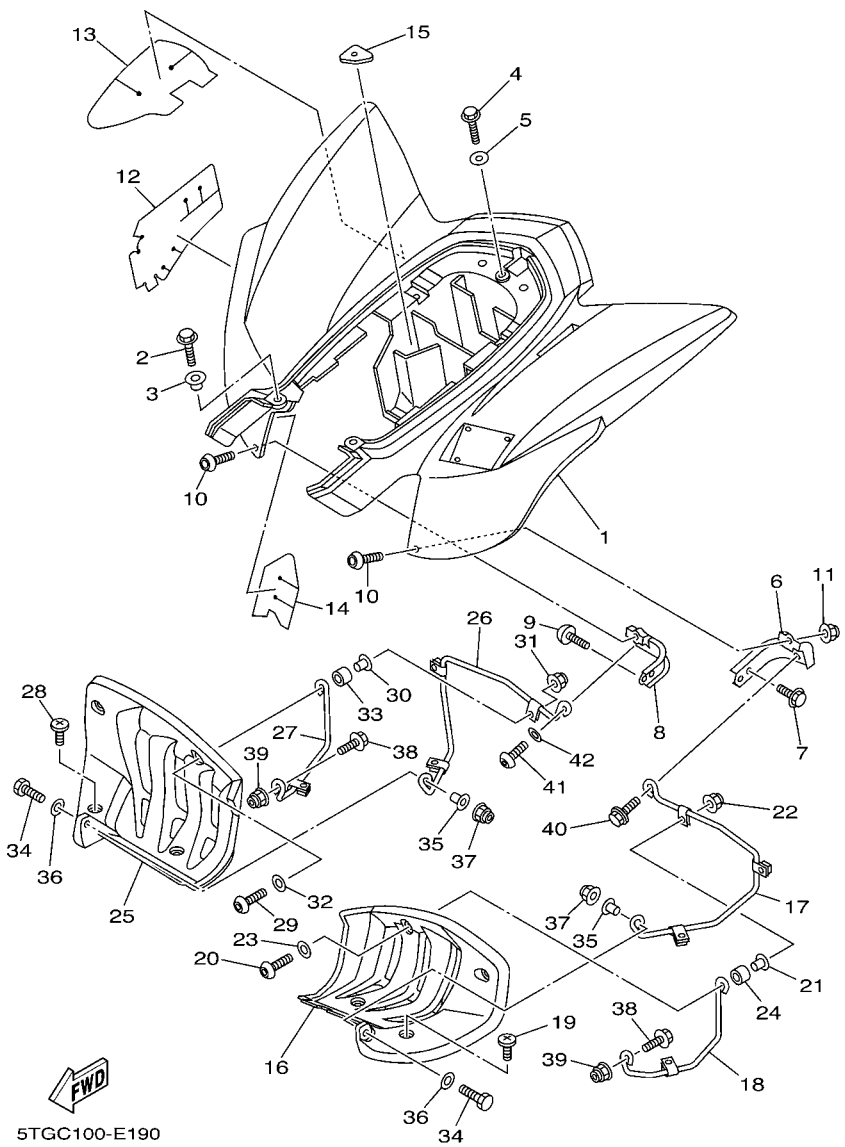

FIG. 19 REAR FENDER

REF. NO.	PART NO.	DESCRIPTION	USA	CAN	EUR	OCE	JPN	REMARKS
1	5TG–W2161–02	REAR FENDER COMP.	1			1	1	UR FOR DPBSE
	5TG–W2161–12	REAR FENDER COMP.	1			1		UR FOR BWS1
	5TG–W216C–02	REAR FENDER COMP.2		1				UR FOR DPBSE
	5TG–W216C–12	REAR FENDER COMP.2		1				UR FOR BWS1
	5TG–W216B–02	REAR FENDER COMP.2			1			UR FOR DPBSE
	5TG–W216B–11	REAR FENDER COMP.2			1			UR FOR BWS1
2	90105–06084	BOLT, FLANGE	2	2	2	2	2	
3	90387–06024	COLLAR	2	2	2	2	2	
4	90105–06084	BOLT, FLANGE	1	1	1	1	1	
5	90201–067A0	WASHER, PLATE	1	1	1	1	1	
6	5TG–21643–10	STAY, REAR	1	1	1	1	1	
7	95822–08012	BOLT, FLANGE	2	2	2	2	2	
8	5TG–21644–20	STAY, REAR	1	1	1	1	1	
9	92012–08012	BOLT, BUTTON HEAD	2	2	2	2	2	
10	90111–06038	BOLT,HEX. SOCKET BUTTON	2	2	2	2	2	
11	95607–06200	NUT, SELF U-FLANGE	1	1	1	1	1	
12	5TG–2163A–00	COVER, REAR FENDER 1	1	1	1	1	1	
13	5TG–2163E–10	COVER, REAR FENDER 2	1	1	1	1	1	
14	5TG–2163F–10	COVER, REAR FENDER 3	1	1	1	1	1	
15	5TG–21639–00	DAMPER 2	1	1	1	1	1	
16	5TG–21621–00	FLAP	1	1	1	1	1	
17	5TG–2164F–10	STAY 1	1	1	1	1	1	
18	1S3–2164H–00	STAY 3	1	1	1	1	1	
19	90154–05013	SCREW, BINDING	3	3	3	3	3	
20	92017–06035	BOLT, BUTTON HEAD	1	1	1	1	1	
21	90560–06201	SPACER	1	1	1	1	1	
22	95607–06200	NUT, SELF U-FLANGE	1	1	1	1	1	

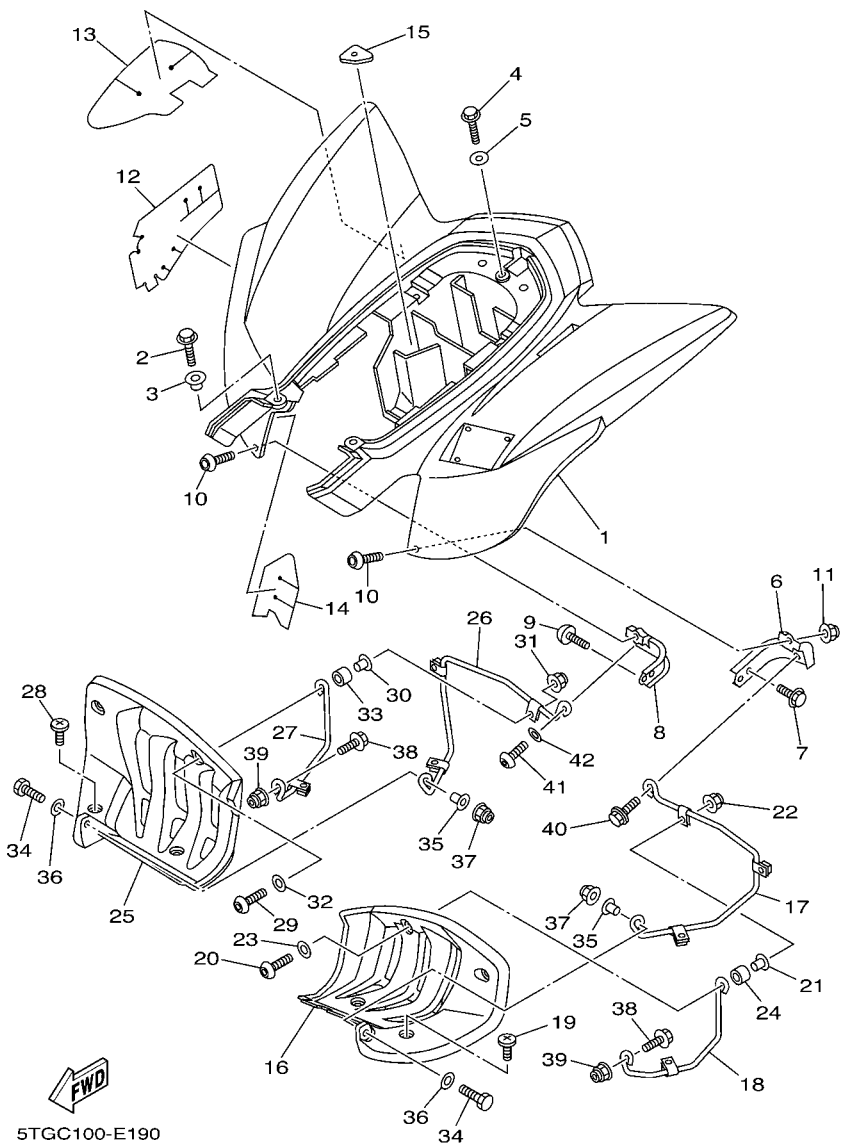

FIG. 19 REAR FENDER

REF. NO.	PART NO.	DESCRIPTION	USA	CAN	EUR	OCE	JPN	REMARKS
23	90201–06778	WASHER, PLATE	1	1	1	1	1	
24	90387–06081	COLLAR	1	1	1	1	1	
25	5TG–21691–00	FLAP	1	1	1	1	1	
26	5TG–2164G–10	STAY 2	1	1	1	1	1	
27	1S3–2164J–00	STAY 4	1	1	1	1	1	
28	90154–05013	SCREW, BINDING	3	3	3	3	3	
29	92017–06035	BOLT, BUTTON HEAD	1	1	1	1	1	
30	90560–06201	SPACER	1	1	1	1	1	
31	95607–06200	NUT, SELF U-FLANGE	1	1	1	1	1	
32	90201–06778	WASHER, PLATE	1	1	1	1	1	
33	90387–06081	COLLAR	1	1	1	1	1	
34	97027–06025	BOLT	2	2	2	2	2	
35	90387–06074	COLLAR	2	2	2	2	2	
36	90201–06013	WASHER, PLATE	2	2	2	2	2	
37	95607–06200	NUT, SELF U-FLANGE	2	2	2	2	2	
38	95827–08020	BOLT, FLANGE	2	2	2	2	2	
39	95607–08200	NUT, SELF-LOCKING	2	2	2	2	2	
40	95827–08016	BOLT, FLANGE	1	1	1	1	1	
41	92017–08020	BOLT, BUTTON HEAD	1	1	1	1	1	
42	90201–086P8	WASHER, PLATE	1	1	1	1	1	

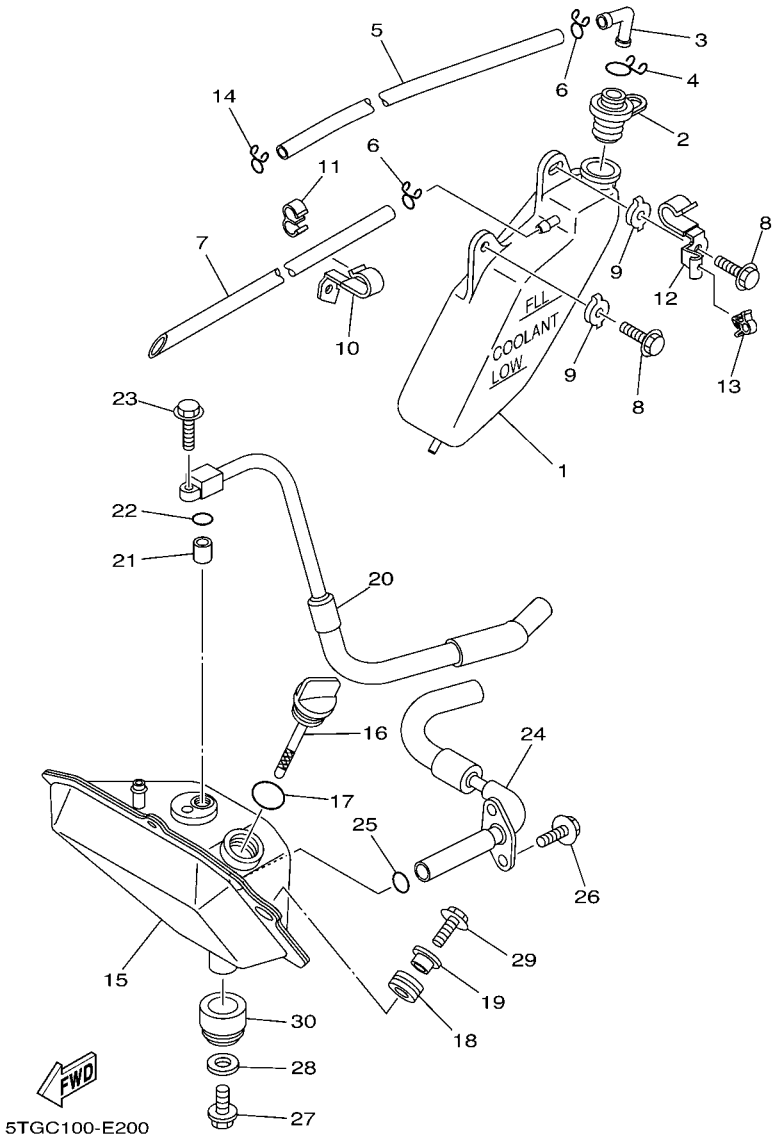

FIG. 20 OIL TANK

REF. NO.	PART NO.	DESCRIPTION	USA	CAN	EUR	OCE	JPN	REMARKS
1	5TG–21871–00	TANK, RECOVERY	1	1	1	1	1	
2	5TG–21875–00	CAP	1	1	1	1	1	
3	26H–21828–00	ELBOW	1	1	1	1	1	
4	90467–11019	CLIP	1	1	1	1	1	
5	90445–090F7	HOSE (L1150)	1	1	1	1	1	
6	90467–08003	CLIP	2	2	2	2	2	
7	90445–09020	HOSE (L600)	1	1	1	1	1	
8	90105–06084	BOLT, FLANGE	2	2	2	2	2	
9	5TG–21715–00	WASHER, SPECIAL 1	2	2	2	2	2	
10	90465–08047	CLAMP	1	1	1	1	1	
11	90464–09M31	CLAMP	1	1	1	1	1	
12	90465–08044	CLAMP	1	1	1	1	1	
13	90464–13133	CLAMP	1	1	1	1	1	
14	90467–08003	CLIP	1	1	1	1	1	
15	5TG–21750–00	OIL TANK ASSY	1	1	1	1	1	
16	5LP–21761–01	GAUGE, LEVEL	1	1	1	1	1	
17	93210–21190	O-RING	1	1	1	1	1	
18	90480–10289	GROMMET	2	2	2	2	2	
19	90387–066Y6	COLLAR	2	2	2	2	2	
20	5TG–13465–00	HOSE, OIL 2	1	1	1	1	1	
21	99530–10114	PIN, DOWEL	1	1	1	1	1	
22	93210–10197	O-RING	1	1	1	1	1	
23	95027–06025	BOLT, FLANGE	1	1	1	1	1	
24	5TG–13464–00	HOSE, OIL 1	1	1	1	1	1	
25	93210–16629	O-RING	1	1	1	1	1	
26	91317–06016	BOLT	2	2	2	2	2	
27	95807–08016	BOLT, FLANGE	1	1	1	1	1	

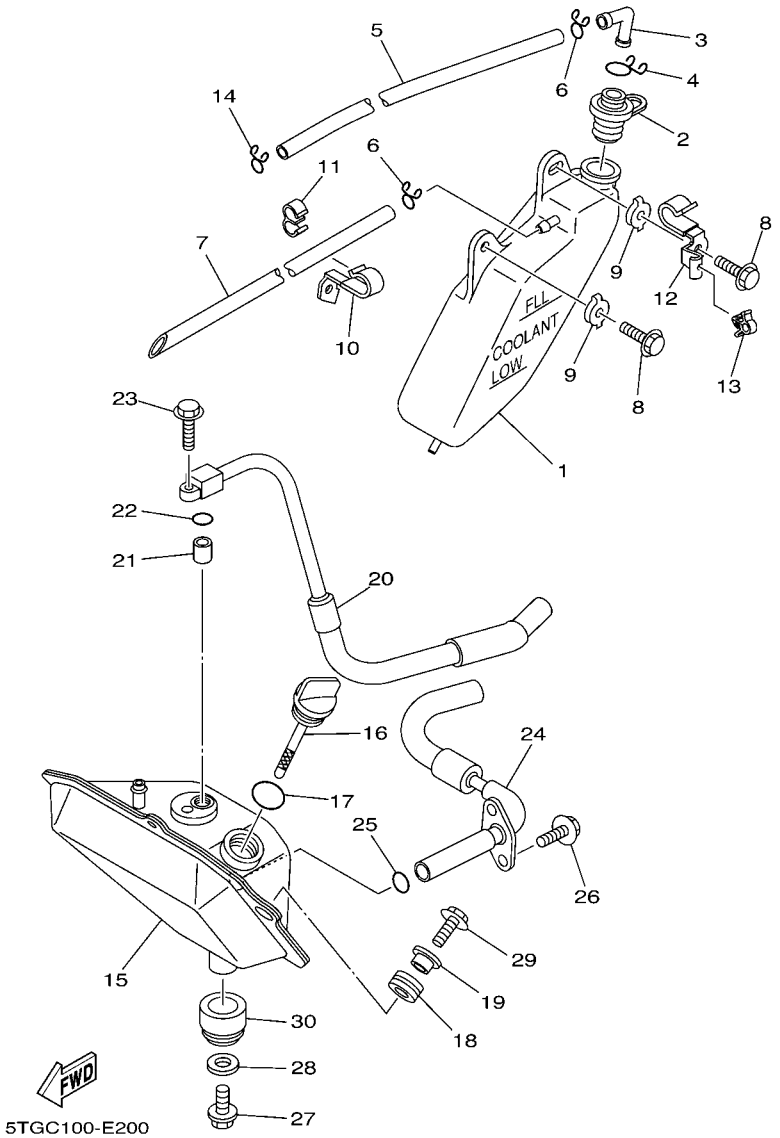

FIG. 20 OIL TANK

REF. NO.	PART NO.	DESCRIPTION	USA	CAN	EUR	OCE	JPN	REMARKS
28	90201–082A6	WASHER, PLATE	1	1	1	1	1	
29	95827–06020	BOLT, FLANGE	2	2	2	2	2	
30	90480–24001	GROMMET	1	1	1	1	1	

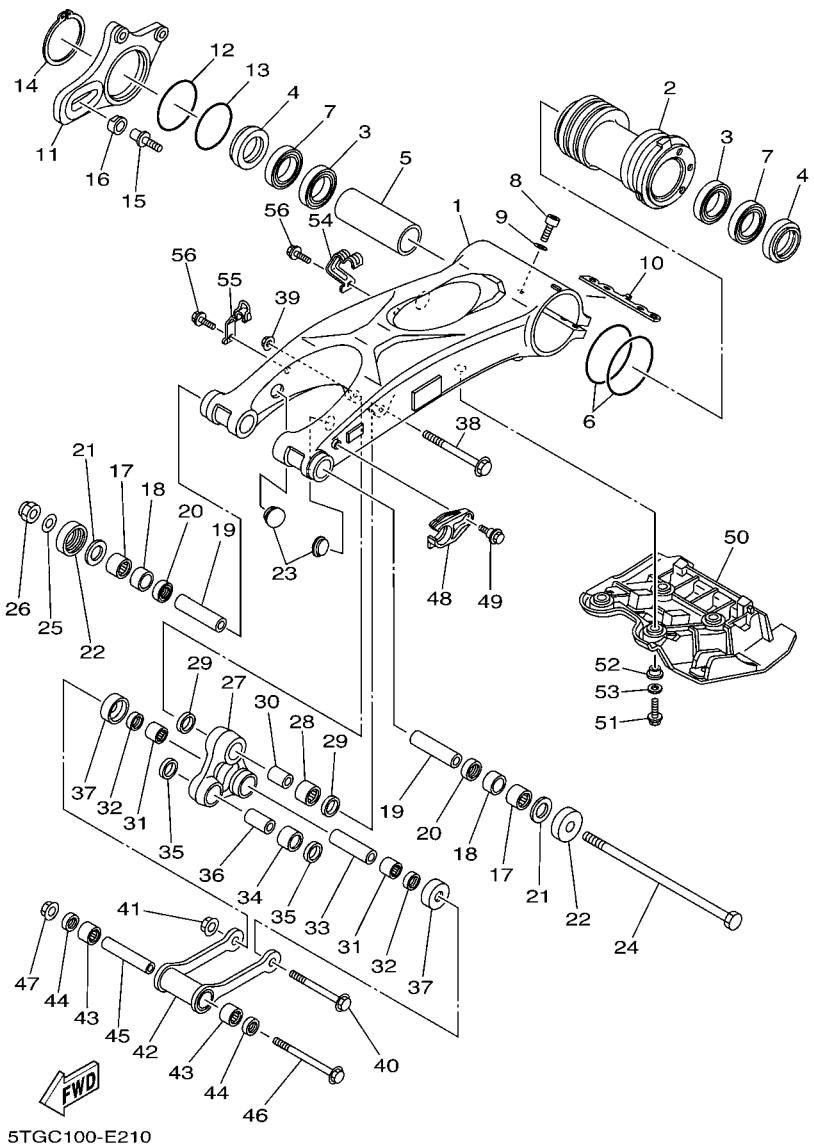

FIG. 21 REAR ARM

REF. NO.	PART NO.	DESCRIPTION	USA	CAN	EUR	OCE	JPN	REMARKS
1	5TG–22110–20	REAR ARM COMP.	1	1	1	1	1	
2	5TG–25311–20	HUB, REAR	1	1	1	1	1	
3	93306–90804	BEARING	2	2	2	2	2	
4	93106–46003	OIL SEAL	2	2	2	2	2	
5	5TG–25317–00	SPACER, BEARING	1	1	1	1	1	
6	1S3–23147–01	O-RING	2	2	2	2	2	
7	93306–90805	BEARING	2	2	2	2	2	
8	91314–08040	BOLT	4	4	4	4	4	
9	92903–08600	WASHER, PLATE	4	4	4	4	4	
10	5TG–22475–00	SEAL, DUST	1	1	1	1	1	
11	5TG–25721–20	BRACKET, CALIPER	1	1	1	1	1	
12	93210–71001	O-RING	1	1	1	1	1	
13	93210–66001	O-RING	1	1	1	1	1	
14	93410–67085	CIRCLIP	1	1	1	1	1	
15	90110–12001	BOLT, HEXAGON SOCKET HEAD	1	1	1	1	1	
16	90387–16014	COLLAR	1	1	1	1	1	
17	93317–22237	BEARING	2	2	2	2	2	
18	90380–22111	BUSH, SOLID	2	2	2	2	2	
19	90387–160W0	COLLAR	2	2	2	2	2	
20	93106–22019	OIL SEAL (DC 22-28-8)	2	2	2	2	2	
21	3YF–22149–00	WASHER	2	2	2	2	2	
22	4X7–22129–00	COVER, THRUST 2	2	2	2	2	2	
23	90338–23004	PLUG	2	2	2	2	2	
24	5LP–22141–00	SHAFT, PIVOT	1	1	1	1	1	
25	90201–160F6	WASHER, PLATE	1	1	1	1	1	
26	90185–16127	NUT, SELF-LOCKING	1	1	1	1	1	
27	5TG–2217A–10	ARM, RELAY	1	1	1	1	1	

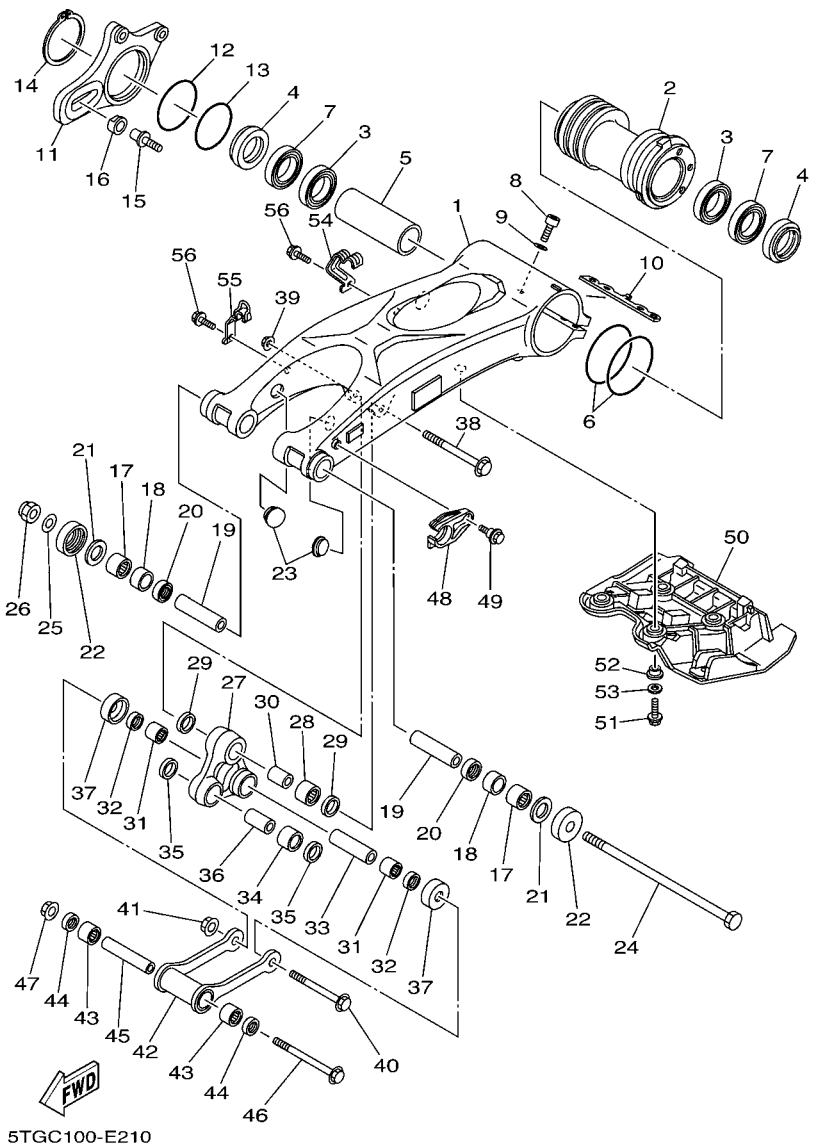

FIG. 21 REAR ARM

REF. NO.	PART NO.	DESCRIPTION	USA	CAN	EUR	OCE	JPN	REMARKS
28	93315–32057	BEARING	1	1	1	1	1	
29	93109–20001	OIL SEAL	2	2	2	2	2	
30	90387–123M3	COLLAR	1	1	1	1	1	
31	93315–31758	BEARING	2	2	2	2	2	
32	93109–17071	OIL SEAL	2	2	2	2	2	
33	90387–12030	COLLAR	1	1	1	1	1	
34	93315–32052	BEARING	1	1	1	1	1	
35	93109–20001	OIL SEAL	2	2	2	2	2	
36	90387–12020	COLLAR	1	1	1	1	1	
37	5TG–22128–00	COVER, THRUST 1	2	2	2	2	2	
38	90105–12038	BOLT, FLANGE	1	1	1	1	1	
39	90185–12002	NUT, SELF-LOCKING	1	1	1	1	1	
40	90105–12040	BOLT, FLANGE	1	1	1	1	1	
41	90185–12002	NUT, SELF-LOCKING	1	1	1	1	1	
42	5TG–2217F–10	ROD, CONNECTING 1	1	1	1	1	1	
43	93315–31758	BEARING	2	2	2	2	2	
44	93109–17071	OIL SEAL	2	2	2	2	2	
45	90387–12019	COLLAR	1	1	1	1	1	
46	90105–12039	BOLT, FLANGE	1	1	1	1	1	
47	90185–12002	NUT, SELF-LOCKING	1	1	1	1	1	
48	5TG–22151–00	SEAL, GUARD	1	1	1	1	1	
49	90109–063F1	BOLT	1	1	1	1	1	
50	5TG–22360–10	GUARD SUB ASSY	1	1	1	1	1	
51	95807–06025	BOLT, FLANGE	4	4	4	4	4	
52	90387–06120	COLLAR	4	4	4	4	4	
53	90201–06057	WASHER, PLATE	4	4	4	4	4	
54	5TG–25886–10	HOLDER, BRAKE HOSE	1	1	1	1	1	

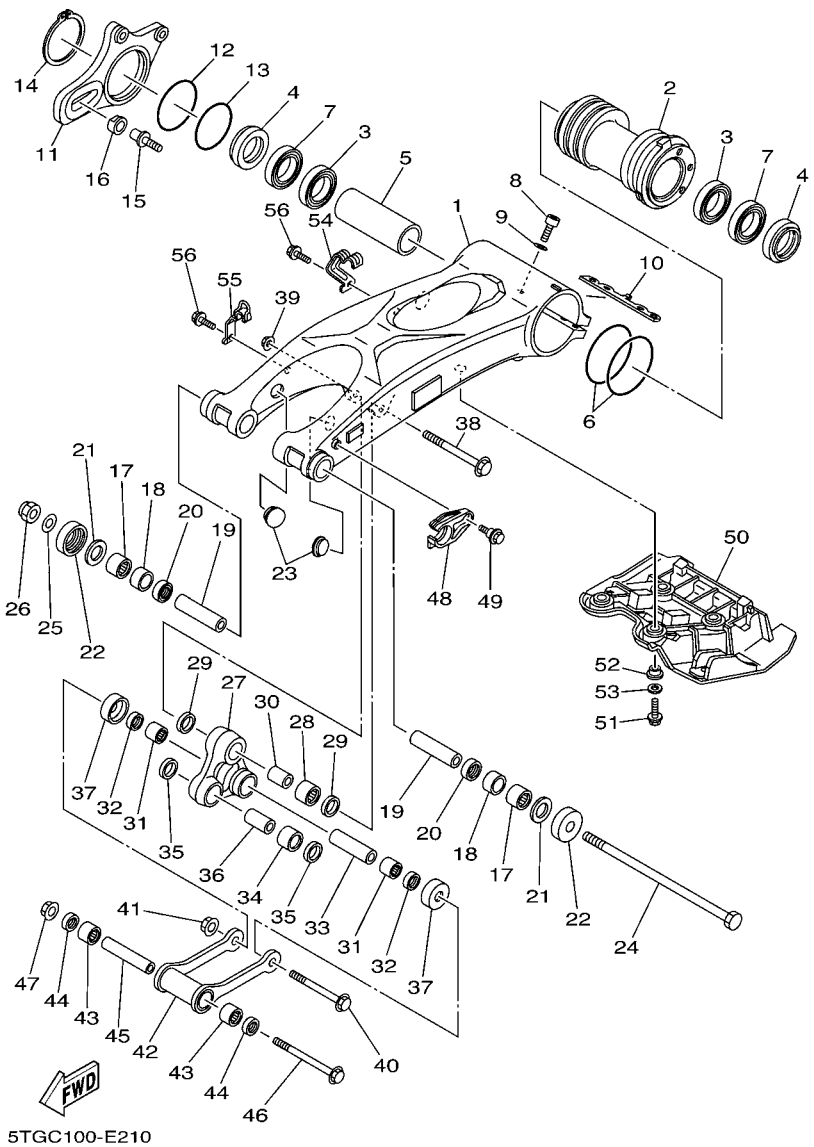

FIG. 21 REAR ARM

REF. NO.	PART NO.	DESCRIPTION	USA	CAN	EUR	OCE	JPN	REMARKS
55	5TG–25887–10	HOLDER, BRAKE HOSE	1	1	1	1	1	
56	95022–06012	BOLT, FLANGE	2	2	2	2	2	

FIG. 22 REAR SUSPENSION

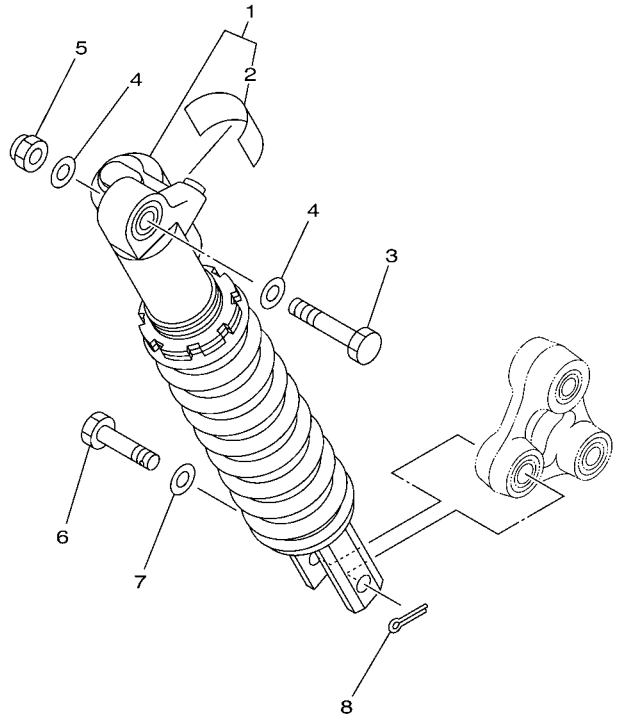

5TGC100-E220

REF. NO.	PART NO.	DESCRIPTION	USA	CAN	EUR	OCE	JPN	REMARKS
1	5TG–22210–P0	SHOCK ABSORBER ASSY, REAR	1					
	5TG–22210–R0	SHOCK ABSORBER ASSY, REAR		1				
	5TG–22210–S0	SHOCK ABSORBER ASSY, REAR			1	1		
	5TG–22210–T0	SHOCK ABSORBER ASSY, REAR					1	
2	4AA–22259–50	.LABEL, WARNING					1	
3	90101–12024	BOLT	1	1	1	1	1	
4	90201–12033	WASHER, PLATE	2	2	2	2	2	
5	90185–12007	NUT, SELF-LOCKING	1	1	1	1	1	
6	90102–12003	BOLT, WITH HOLE	1	1	1	1	1	
7	90201–12034	WASHER, PLATE	1	1	1	1	1	
8	91402–30025	PIN, COTTER	1	1	1	1	1	

FIG. 23 STEERING

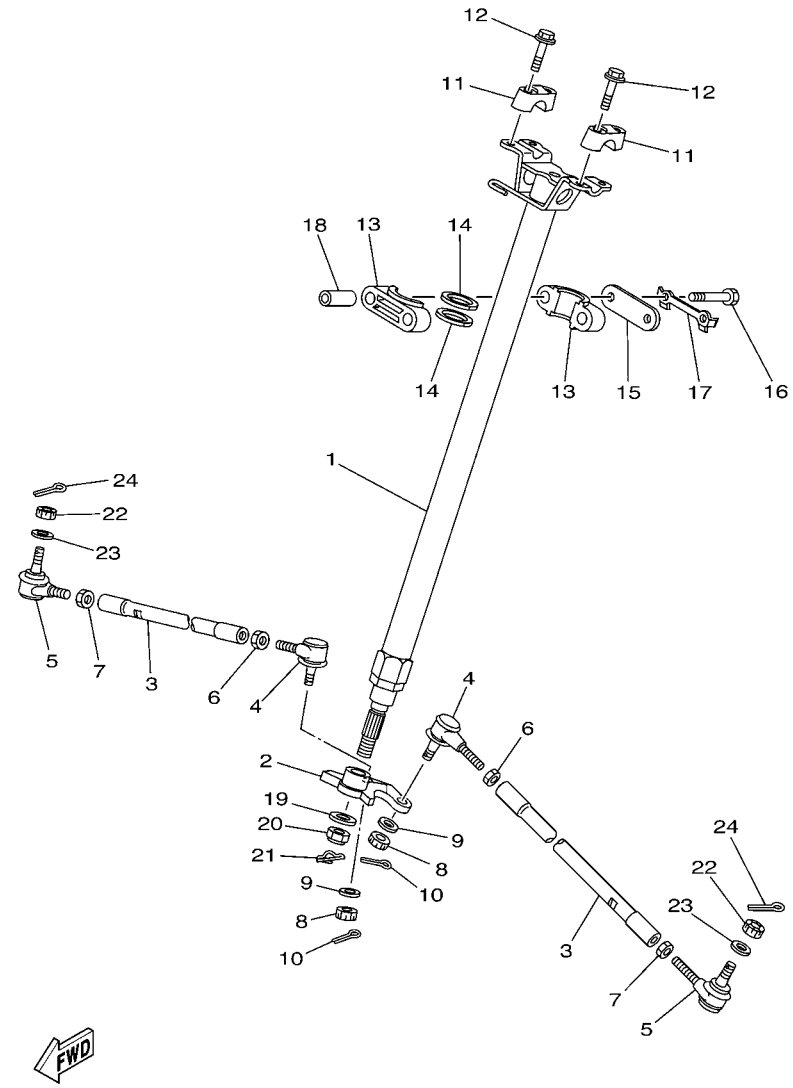

1S31100-E240

REF. NO.	PART NO.	DESCRIPTION	USA	CAN	EUR	OCE	JPN	REMARKS
1	5TG–23813–10	COLUMN, STEERING 2	1	1	1	1	1	
2	5TG–23816–00	ARM, PITMAN	1	1	1	1	1	
3	1S3–23831–00	ROD, TIE	2	2	2	2	2	
4	1S3–23841–00	JOINT, UNIVERSAL 1	2	2	2	2	2	
5	1S3–23845–00	JOINT, UNIVERSAL 2	2	2	2	2	2	
6	90170–12055	NUT	2	2	2	2	2	
7	90170–12054	NUT	2	2	2	2	2	(RH. THREAD)
8	90171–10001	NUT, CASTLE	2	2	2	2	2	
9	90209–10229	WASHER	2	2	2	2	2	
10	91402–20020	PIN, COTTER	2	2	2	2	2	
11	8K1–23814–00	HOLDER, HANDLE	2	2	2	2	2	
12	95827–08030	BOLT, FLANGE	4	4	4	4	4	
13	1UY–23812–00	PLANE BEARING, STEERING	2	2	2	2	2	
14	93112–31011	OIL SEAL	2	2	2	2	2	
15	1UY–23868–01	BRACKET, STEERING LOWER	1	1	1	1	1	
16	97022–08060	BOLT	2	2	2	2	2	
17	1UY–23894–01	WASHER, LOCK 1	1	1	1	1	1	
18	90387–090R0	COLLAR	2	2	2	2	2	
19	90201–14226	WASHER, PLATE	1	1	1	1	1	
20	90185–14070	NUT, SELF-LOCKING	1	1	1	1	1	
21	90468–16191	CLIP	1	1	1	1	1	
22	90171–10001	NUT, CASTLE	2	2	2	2	2	
23	90209–10229	WASHER	2	2	2	2	2	
24	91402–20020	PIN, COTTER	2	2	2	2	2	

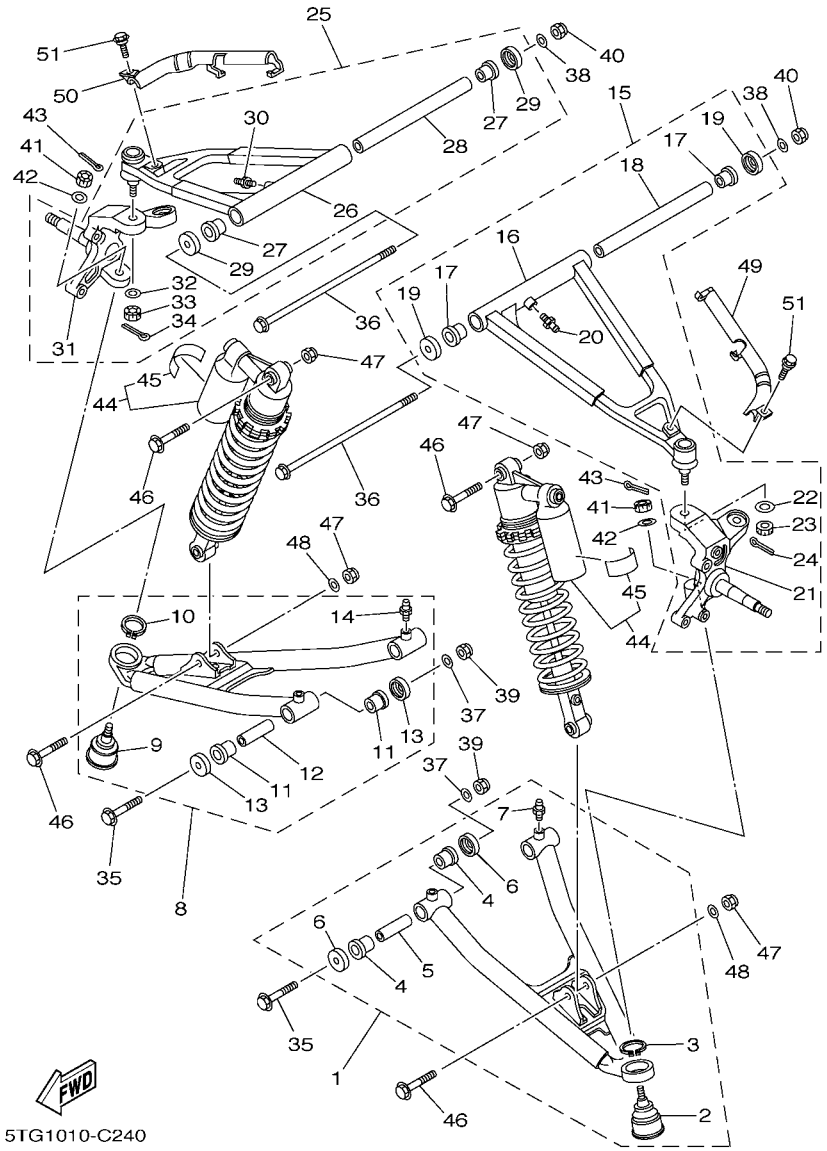

FIG. 24 FRONT SUSPENSION & WHEEL

REF. NO.	PART NO.	DESCRIPTION	USA	CAN	EUR	OCE	JPN	REMARKS
1	5TG–23507–20	FRONT LOWER ARM SUB-ASSY (L.H)	1	1	1	1	1	UR FOR DPBSE
	5TG–23507–00	FRONT LOWER ARM SUB-ASSY (L.H)	1	1	1	1		UR FOR BWS1
2	5LP–23579–00	.BALL JOINT 2	1	1	1	1	1	
3	99009–30400	.CIRCLIP	1	1	1	1	1	
4	90381–15088	.BUSH, SOLID	4	4	4	4	4	
5	90387–101R3	.COLLAR	2	2	2	2	2	
6	5YT–23517–00	.COVER, THRUST 1	4	4	4	4	4	
7	93700–06004	.NIPPLE, GREASE	2	2	2	2	2	
8	5TG–23508–20	FRONT LOWER ARM SUB-ASSY (R.H)	1	1	1	1	1	UR FOR DPBSE
	5TG–23508–00	FRONT LOWER ARM SUB-ASSY (R.H)	1	1	1	1		UR FOR BWS1
9	5LP–23579–00	.BALL JOINT 2	1	1	1	1	1	
10	99009–30400	.CIRCLIP	1	1	1	1	1	
11	90381–15088	.BUSH, SOLID	4	4	4	4	4	
12	90387–101R3	.COLLAR	2	2	2	2	2	
13	5YT–23517–00	.COVER, THRUST 1	4	4	4	4	4	
14	93700–06004	.NIPPLE, GREASE	2	2	2	2	2	
15	5TG–23505–20	FRONT UPPER ARM SUB ASSY LH	1	1	1	1	1	UR FOR DPBSE
	5TG–23505–30	FRONT UPPER ARM SUB ASSY LH	1	1	1	1		UR FOR BWS1
16	5TG–23540–20	.FRONT UPPER ARM COMP. (LEFT)	1	1	1	1	1	UR FOR DPBSE
	5TG–23540–00	.FRONT UPPER ARM COMP. (LEFT)	1	1	1	1		UR FOR BWS1
17	90381–15088	.BUSH, SOLID	2	2	2	2	2	
18	90387–100Y6	.COLLAR	1	1	1	1	1	
19	5YT–23517–00	.COVER, THRUST 1	2	2	2	2	2	
20	93700–06004	.NIPPLE, GREASE	1	1	1	1	1	
21	1S3–23501–00	.STEERING KNUCKLE ASSY (LEFT)	1	1	1	1	1	
22	90209–10229	.WASHER	1	1	1	1	1	
23	90171–10001	.NUT, CASTLE	1	1	1	1	1	

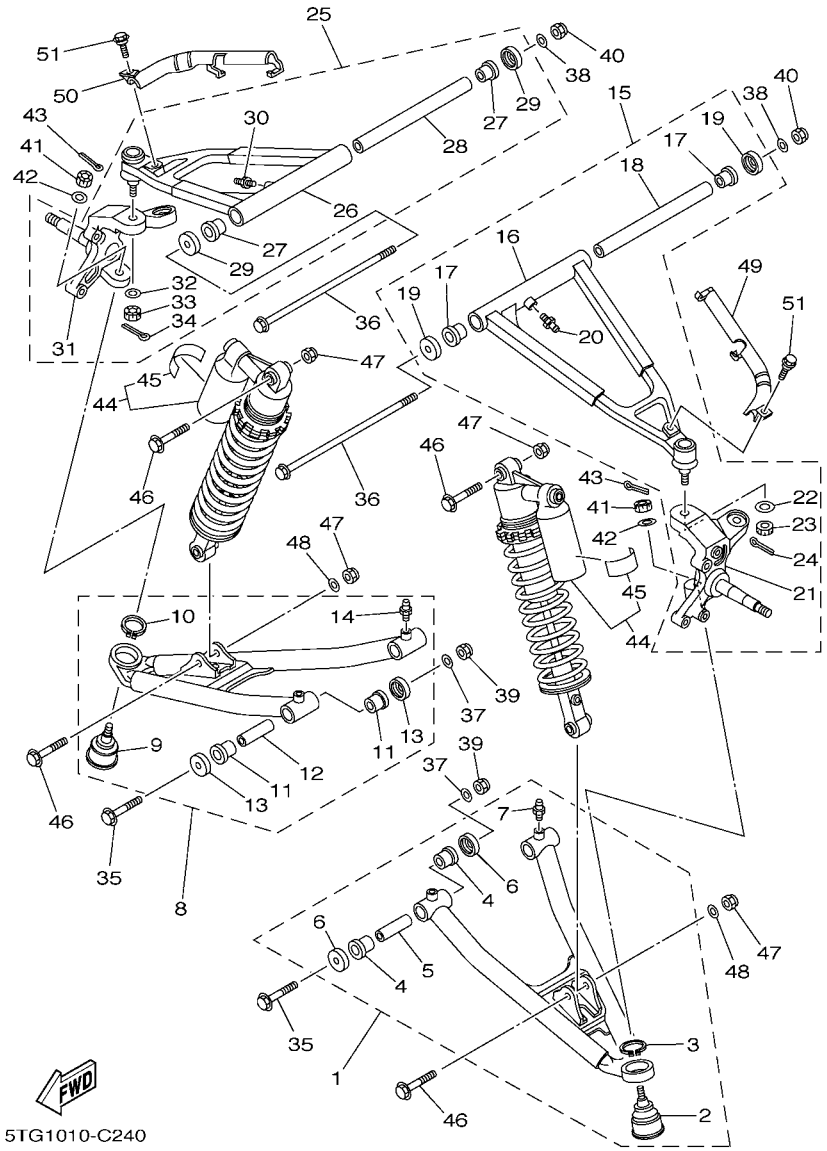

FIG. 24 FRONT SUSPENSION & WHEEL

REF. NO.	PART NO.	DESCRIPTION	USA	CAN	EUR	OCE	JPN	REMARKS
24	91402–20020	.PIN, COTTER	1	1	1	1	1	
25	5TG–23506–20	FRONT UPPER ARM SUB ASSY RH	1	1	1	1	1	UR FOR DPBSE
	5TG–23506–30	FRONT UPPER ARM SUB ASSY RH	1	1	1	1		UR FOR BWS1
26	5TG–23550–20	.FRONT UPPER ARM COMP. (RIGHT)	1	1	1	1	1	UR FOR DPBSE
	5TG–23550–00	.FRONT UPPER ARM COMP. (RIGHT)	1	1	1	1		UR FOR BWS1
27	90381–15088	.BUSH, SOLID	2	2	2	2	2	
28	90387–100Y6	.COLLAR	1	1	1	1	1	
29	5YT–23517–00	.COVER, THRUST 1	2	2	2	2	2	
30	93700–06004	.NIPPLE, GREASE	1	1	1	1	1	
31	1S3–23502–00	.STEERING KNUCKLE ASSY (RIGHT)	1	1	1	1	1	
32	90209–10229	.WASHER	1	1	1	1	1	
33	90171–10001	.NUT, CASTLE	1	1	1	1	1	
34	91402–20020	.PIN, COTTER	1	1	1	1	1	
35	90105–10135	BOLT, FLANGE	4	4	4	4	4	
36	90105–10132	BOLT, FLANGE	2	2	2	2	2	
37	90201–10037	WASHER, PLATE	4	4	4	4	4	
38	90201–10037	WASHER, PLATE	2	2	2	2	2	
39	90185–10012	NUT, SELF-LOCKING	4	4	4	4	4	
40	90185–10012	NUT, SELF-LOCKING	2	2	2	2	2	
41	90171–10001	NUT, CASTLE	2	2	2	2	2	
42	90209–10229	WASHER	2	2	2	2	2	
43	91402–20020	PIN, COTTER	2	2	2	2	2	
44	5TG–23350–P0	SHOCK ABSORBER ASSY	2					
	5TG–23350–R0	SHOCK ABSORBER ASSY		2				
	5TG–23350–S0	SHOCK ABSORBER ASSY			2	2		
	5TG–23350–T0	SHOCK ABSORBER ASSY					2	
45	4AA–22259–50	.LABEL, WARNING					1	

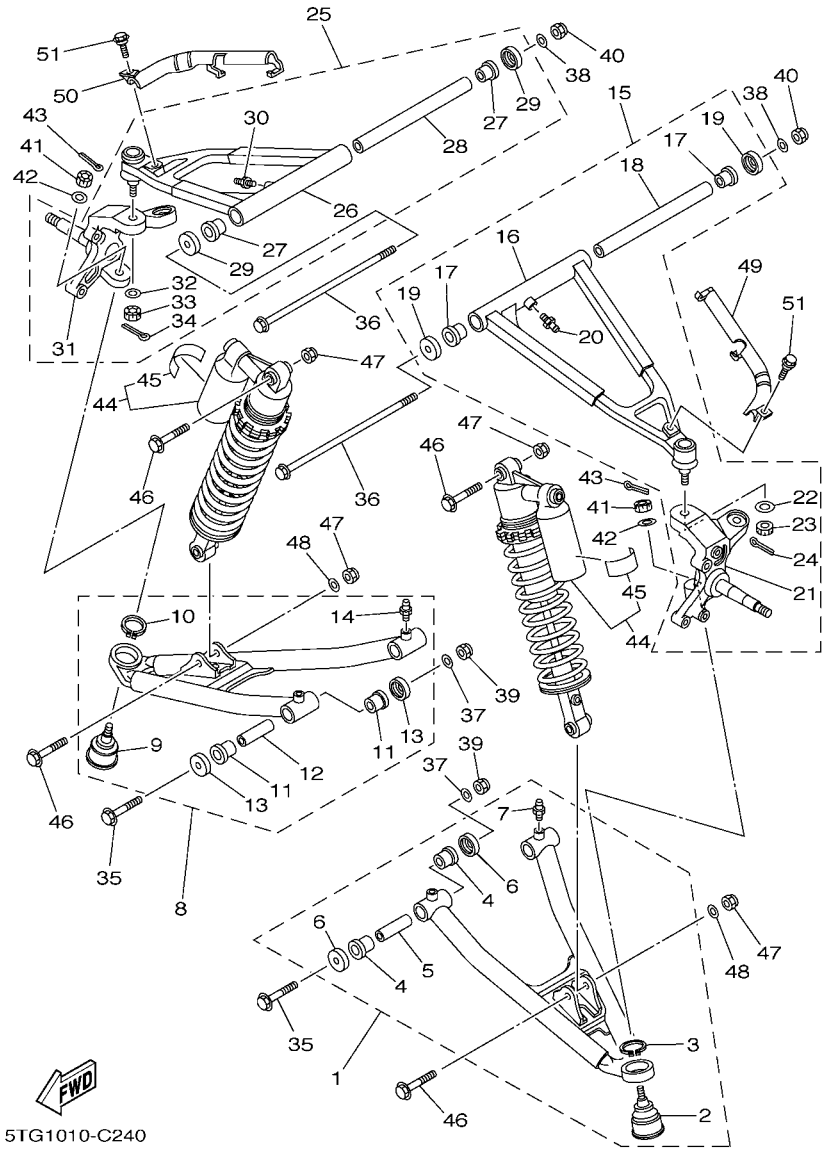

FIG. 24 FRONT SUSPENSION & WHEEL

REF. NO.	PART NO.	DESCRIPTION	USA	CAN	EUR	OCE	JPN	REMARKS
46	90105–10131	BOLT, FLANGE	4	4	4	4	4	
47	90185–10012	NUT, SELF-LOCKING	4	4	4	4	4	
48	90201–10035	WASHER, PLATE	2	2	2	2	2	
49	5TG–25875–00	HOLDER, BRAKE HOSE 1	1	1	1	1	1	
50	5TG–25876–00	HOLDER, BRAKE HOSE 2	1	1	1	1	1	
51	90109–067F4	BOLT	2	2	2	2	2	

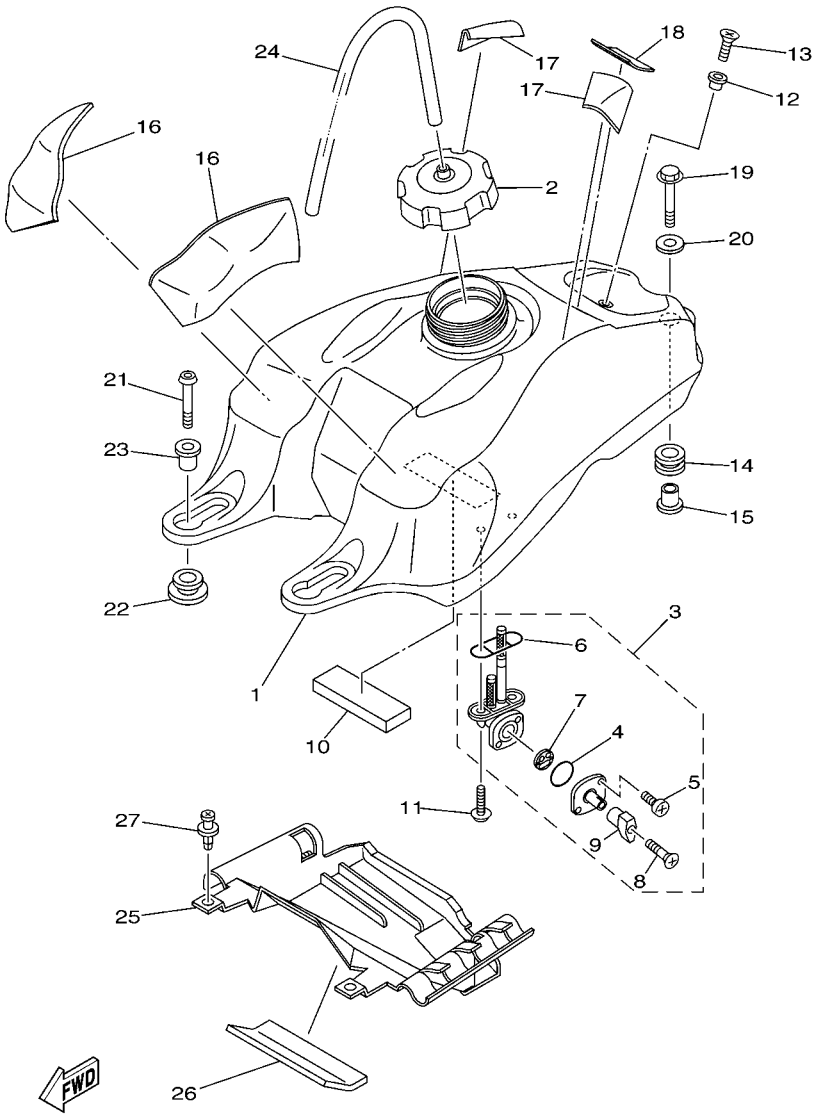

FIG. 25 FUEL TANK

REF. NO.	PART NO.	DESCRIPTION	USA	CAN	EUR	OCE	JPN	REMARKS
1	5TG–24110–00	FUEL TANK COMP.	1	1	1	1	1	
2	5KM–24610–00	CAP ASSY	1	1	1	1	1	
3	5TG–24500–01	FUEL COCK ASSY 1	1	1	1	1	1	
4	3AJ–24534–01	.SEAL, COCK	1	1	1	1	1	
5	98507–03008	.SCREW, PAN HEAD	2	2	2	2	2	
6	4X8–24512–00	.O-RING	1	1	1	1	1	
7	3AC–24523–00	.VALVE PACKING	1	1	1	1	1	
8	98606–04018	.SCREW, OVAL HEAD	1	1	1	1	1	
9	4HM–24524–00	.LEVER, COCK	1	1	1	1	1	
10	5TG–24181–00	DAMPER, LOCATING 1	1	1	1	1	1	
11	90149–06011	SCREW	2	2	2	2	2	
12	4EW–2412F–00	BRACKET, SEAT	1	1	1	1	1	
13	98707–06025	SCREW, FLAT HEAD	1	1	1	1	1	
14	90480–18290	GROMMET	1	1	1	1	1	
15	90387–066J1	COLLAR	1	1	1	1	1	
16	12R–21747–00	DAMPER	2	2	2	2	2	
17	M12–T133A–00	SEAT, DAMPER A	2	2	2	2	2	
18	22F–2139X–00	DAMPER	1	1	1	1	1	
19	95827–06030	BOLT, FLANGE	1	1	1	1	1	
20	90201–06071	WASHER, PLATE	1	1	1	1	1	
21	92017–06025	BOLT, BUTTON HEAD	2	2	2	2	2	
22	90480–18004	GROMMET	2	2	2	2	2	
23	90387–066J1	COLLAR	2	2	2	2	2	
24	90445–083J4	HOSE (L340)	1	1	1	1	1	
25	5TG–2414H–00	DAMPER, PLATE 1	1	1	1	1	1	
26	12R–21747–00	DAMPER	1	1	1	1	1	
27	90269–06002	RIVET	2	2	2	2	2	

FIG. 26 SEAT

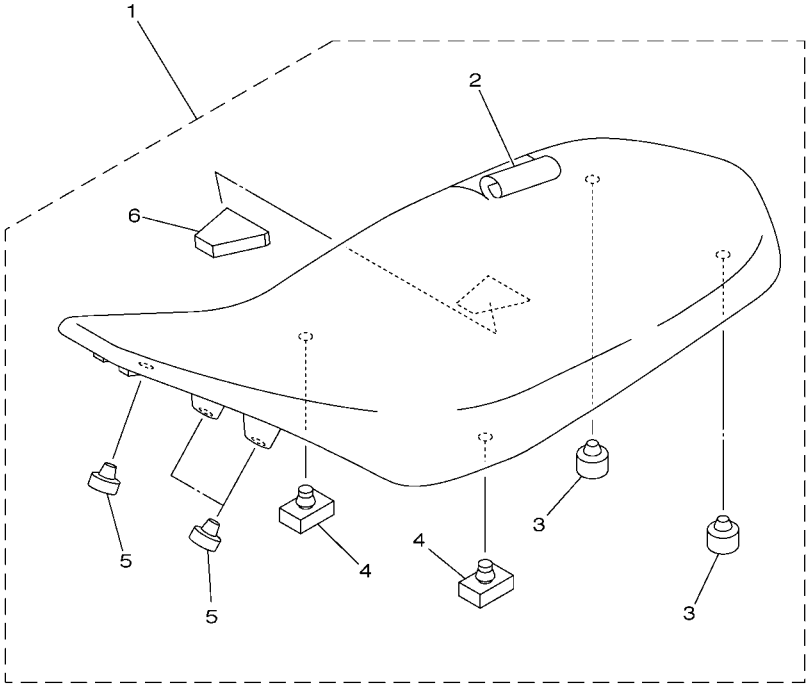

5TG1100-C260

REF. NO.	PART NO.	DESCRIPTION	USA	CAN	EUR	OCE	JPN	REMARKS
1	5TG–24710–40	SINGLE SEAT ASSY	1	1	1	1	1	
2	5TG–2470F–40	.SEAT COVER COMP.	1	1	1	1	1	
3	371–27114–00	.STOPPER, MAIN STAND	2	2	2	2	2	
4	214–24724–00	.DAMPER, SEAT	2	2	2	2	2	
5	22W–24741–00	.PAD, SEAT	3	3	3	3	3	
6	5TG–24725–00	.SPACER	1	1	1	1	1	

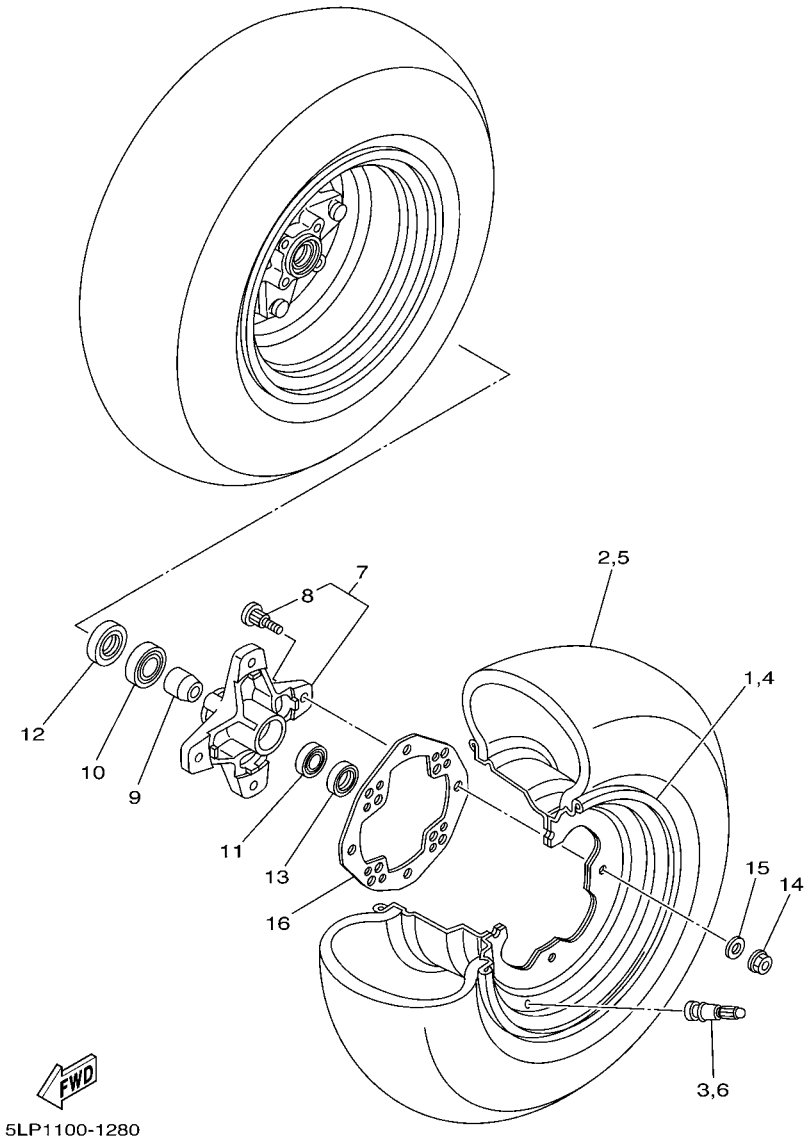

FIG. 27 FRONT WHEEL

REF. NO.	PART NO.	DESCRIPTION	USA	CAN	EUR	OCE	JPN	REMARKS
1	5LP–25180–10	WHEEL COMP.	1	1	1	1	1	
2	94107–10015	TIRE (AT21X7R10 KT341 T/L N)	1	1	1	1	1	DUNLOP
3	93900–00030	VALVE, RIM (TR412)	1	1	1	1	1	TAIHEIYO
4	5LP–25180–10	WHEEL COMP.	1	1	1	1	1	
5	94107–10015	TIRE (AT21X7R10 KT341 T/L N)	1	1	1	1	1	DUNLOP
6	93900–00030	VALVE, RIM (TR412)	1	1	1	1	1	TAIHEIYO
7	1S3–25111–00	HUB, FRONT	2	2	2	2	2	
8	90114–10006	.BOLT, SERRATION	4	4	4	4	4	
9	5LP–25117–00	SPACER, BEARING	2	2	2	2	2	
10	93306–00446	BEARING	2	2	2	2	2	
11	93306–20231	BEARING	2	2	2	2	2	
12	93105–26026	OIL SEAL	2	2	2	2	2	
13	93102–22216	OIL SEAL	2	2	2	2	2	
14	95702–10500	NUT, FLANGE	8	8	8	8	8	
15	92902–10200	WASHER	8	8	8	8	8	
16	1S3–25127–00	COVER, PLATE	2	2	2	2	2	

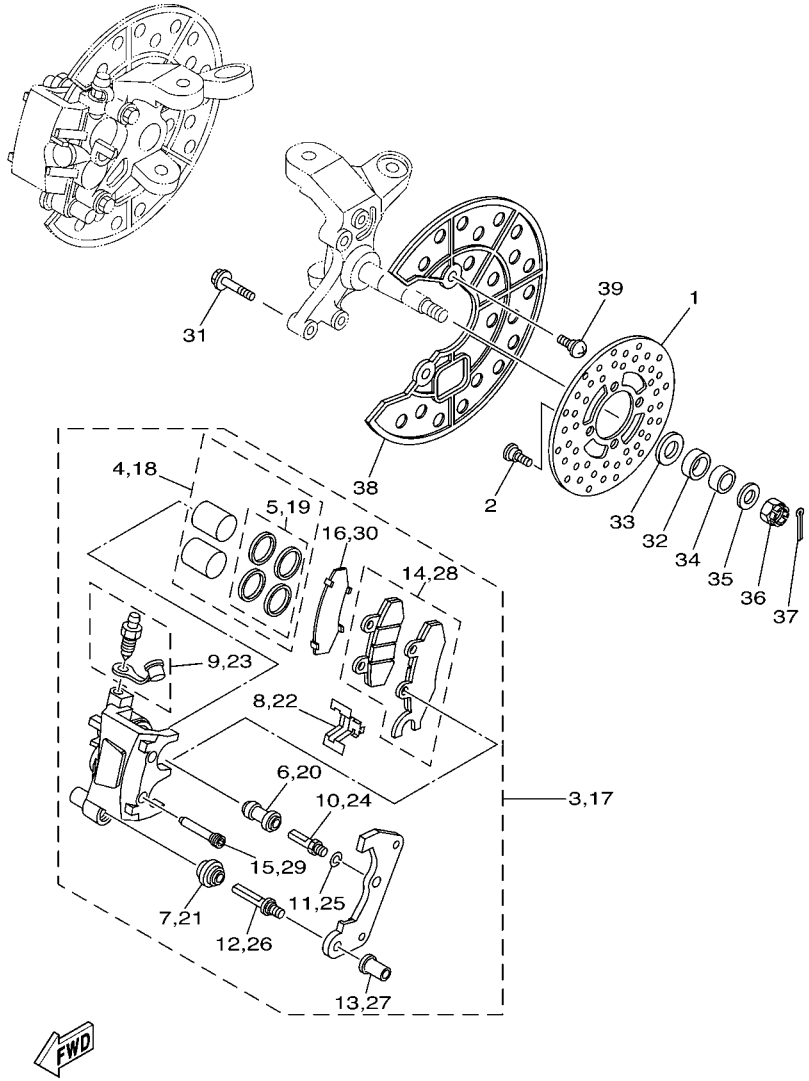

1S31100-E290

FIG. 28 FRONT BRAKE CALIPER

REF. NO.	PART NO.	DESCRIPTION	USA	CAN	EUR	OCE	JPN	REMARKS
1	3GD–2582T–10	DISC, BRAKE (LEFT)	2	2	2	2	2	
2	90109–08082	BOLT	8	8	8	8	8	
3	5TG–2580T–10	CALIPER ASSY (LEFT)	1	1	1	1	1	
4	5TG–W0057–00	.PISTON ASSY, CALIPER	1	1	1	1	1	
5	3LC–W0047–50	..CALIPER SEAL KIT	1	1	1	1	1	
6	1UY–25937–51	.BOOT 2	1	1	1	1	1	
7	3JD–25917–00	.BOOT, CALIPER	1	1	1	1	1	
8	3JD–25919–00	.SUPPORT, PAD	1	1	1	1	1	
9	1UY–W0048–50	.BLEED SCREW KIT	1	1	1	1	1	
10	1UY–25926–51	.BOLT	1	1	1	1	1	
11	1UY–25938–51	.WASHER, SPRING	1	1	1	1	1	
12	3JD–25926–00	.BOLT	1	1	1	1	1	
13	3JD–25961–00	.NUT	1	1	1	1	1	
14	5TG–W0045–20	.BRAKE PAD KIT	1	1	1	1	1	
15	5TG–25924–00	.PIN, PAD	2	2	2	2	2	
16	1S3–25828–00	.SHIM, CALIPER	1	1	1	1	1	
17	5TG–2580U–10	CALIPER ASSY (RIGHT)	1	1	1	1	1	
18	5TG–W0057–00	.PISTON ASSY, CALIPER	1	1	1	1	1	
19	3LC–W0047–50	..CALIPER SEAL KIT	1	1	1	1	1	
20	1UY–25937–51	.BOOT 2	1	1	1	1	1	
21	3JD–25917–00	.BOOT, CALIPER	1	1	1	1	1	
22	3JD–25919–00	.SUPPORT, PAD	1	1	1	1	1	
23	1UY–W0048–50	.BLEED SCREW KIT	1	1	1	1	1	
24	1UY–25926–51	.BOLT	1	1	1	1	1	
25	1UY–25938–51	.WASHER, SPRING	1	1	1	1	1	
26	3JD–25926–00	.BOLT	1	1	1	1	1	
27	3JD–25961–00	.NUT	1	1	1	1	1	

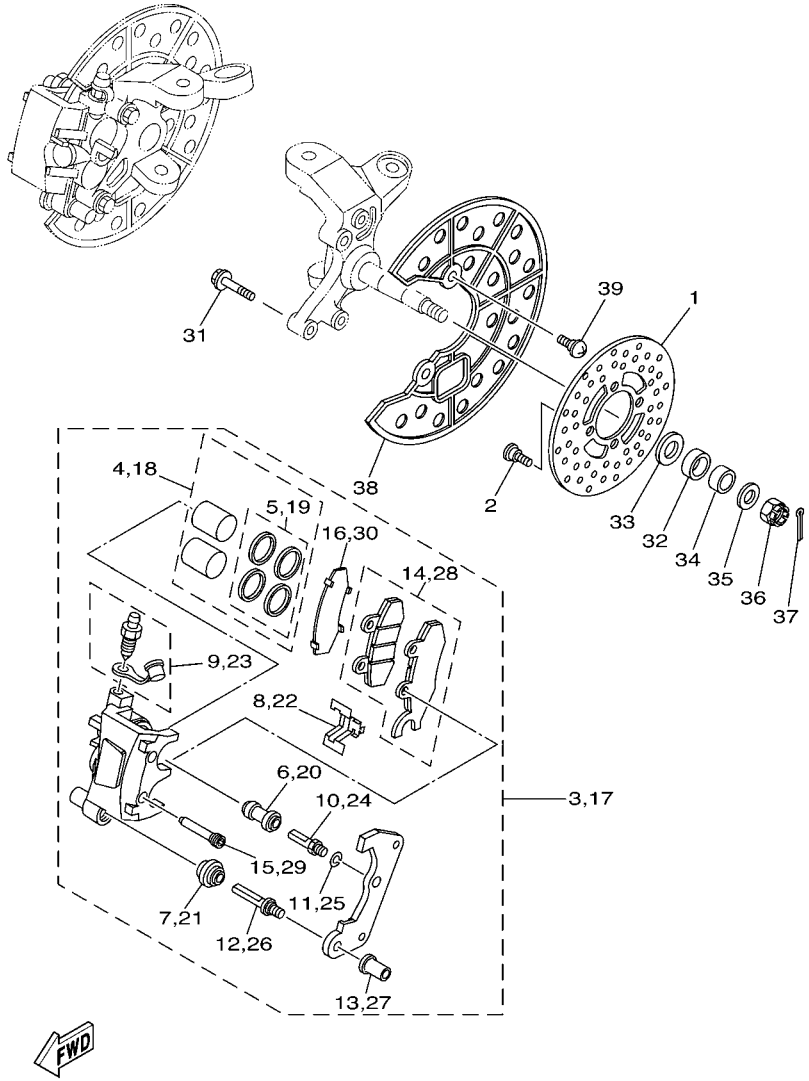

1S31100-E290

FIG. 28 FRONT BRAKE CALIPER

REF. NO.	PART NO.	DESCRIPTION	USA	CAN	EUR	OCE	JPN	REMARKS
28	5TG–W0045–30	.BRAKE PAD KIT	1	1	1	1	1	
29	5TG–25924–00	.PIN, PAD	2	2	2	2	2	
30	1S3–25828–00	.SHIM, CALIPER	1	1	1	1	1	
31	90105–08520	BOLT, FLANGE	4	4	4	4	4	
32	90387–20005	COLLAR	2	2	2	2	2	
33	90201–20022	WASHER, PLATE	2	2	2	2	2	
34	90387–150R1	COLLAR	2	2	2	2	2	
35	90201–14586	WASHER, PLATE	2	2	2	2	2	
36	90171–14002	NUT, CASTLE	2	2	2	2	2	
37	91402–30025	PIN, COTTER	2	2	2	2	2	
38	5TG–2514A–00	RING, WHEEL 1 (LEFT)	2	2	2	2	2	
39	90154–06014	SCREW, BINDING	4	4	4	4	4	

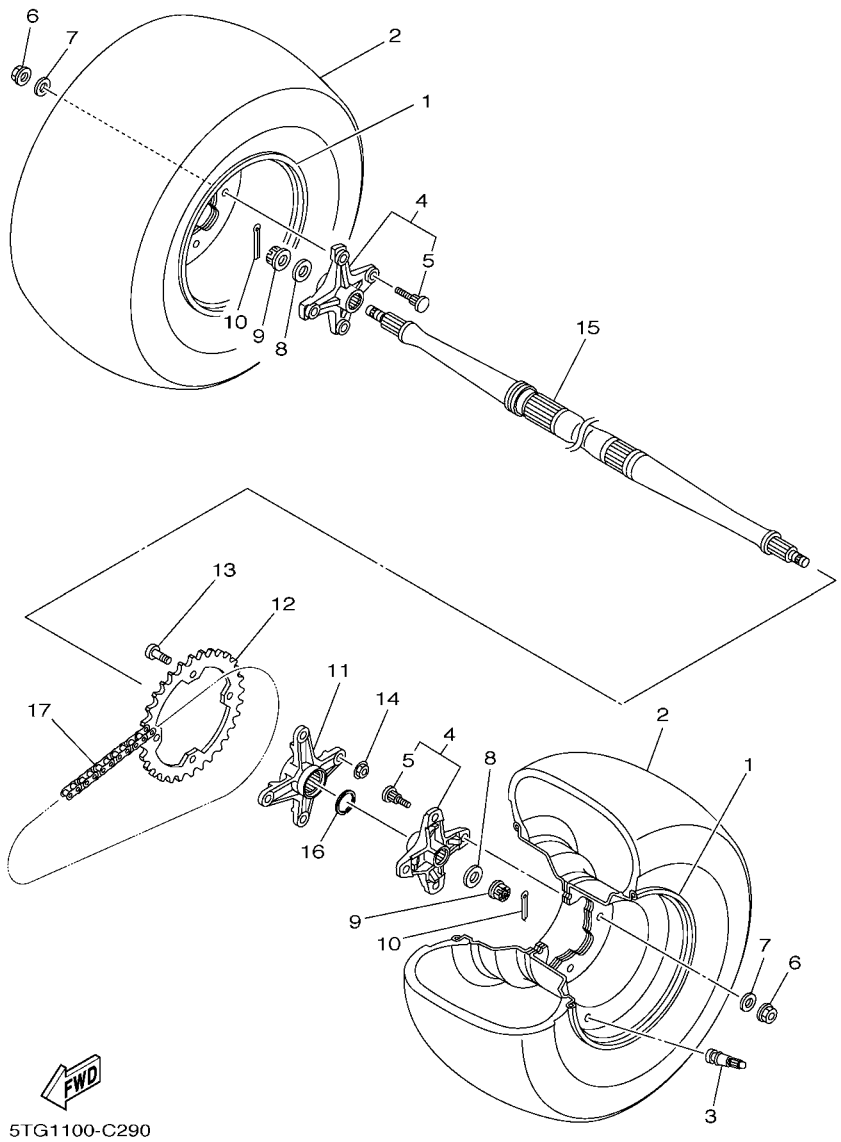

FIG. 29 REAR WHEEL

REF. NO.	PART NO.	DESCRIPTION	USA	CAN	EUR	OCE	JPN	REMARKS
1	5LP–25390–10	REAR WHEEL COMP.	2	2	2	2	2	
2	94110–09015	TIRE (AT20X10R9 KT355 TL)	2	2	2	2	2	DUNLOP
3	93900–00022	VALVE, RIM (TR413)	2	2	2	2	2	TAIHEIYO
4	1S3–25383–00	COLLAR, WHEEL	2	2	2	2	2	
5	90114–10013	.BOLT, SERRATION	4	4	4	4	4	
6	95702–10500	NUT, FLANGE	8	8	8	8	8	
7	92902–10200	WASHER	8	8	8	8	8	
8	90201–163M0	WASHER, PLATE	2	2	2	2	2	
9	90171–16001	NUT, CASTLE	2	2	2	2	2	
10	91402–30030	PIN, COTTER	2	2	2	2	2	
11	1S3–25386–00	COLLAR, SPROCKET AXLE	1	1	1	1	1	
12	5TG–25438–10	SPROCKET, DRIVEN (38T)	1	1	1	1	1	
13	90109–10013	BOLT	4	4	4	4	4	
14	90185–10011	NUT, SELF-LOCKING	4	4	4	4	4	
15	5TG–25381–10	AXLE, WHEEL	1	1	1	1	1	
16	1S3–25415–00	CIRCLIP	1	1	1	1	1	
17	94582–13096	CHAIN (DID520MXV)	1	1	1	1	1	

FIG. 30 REAR BRAKE CALIPER

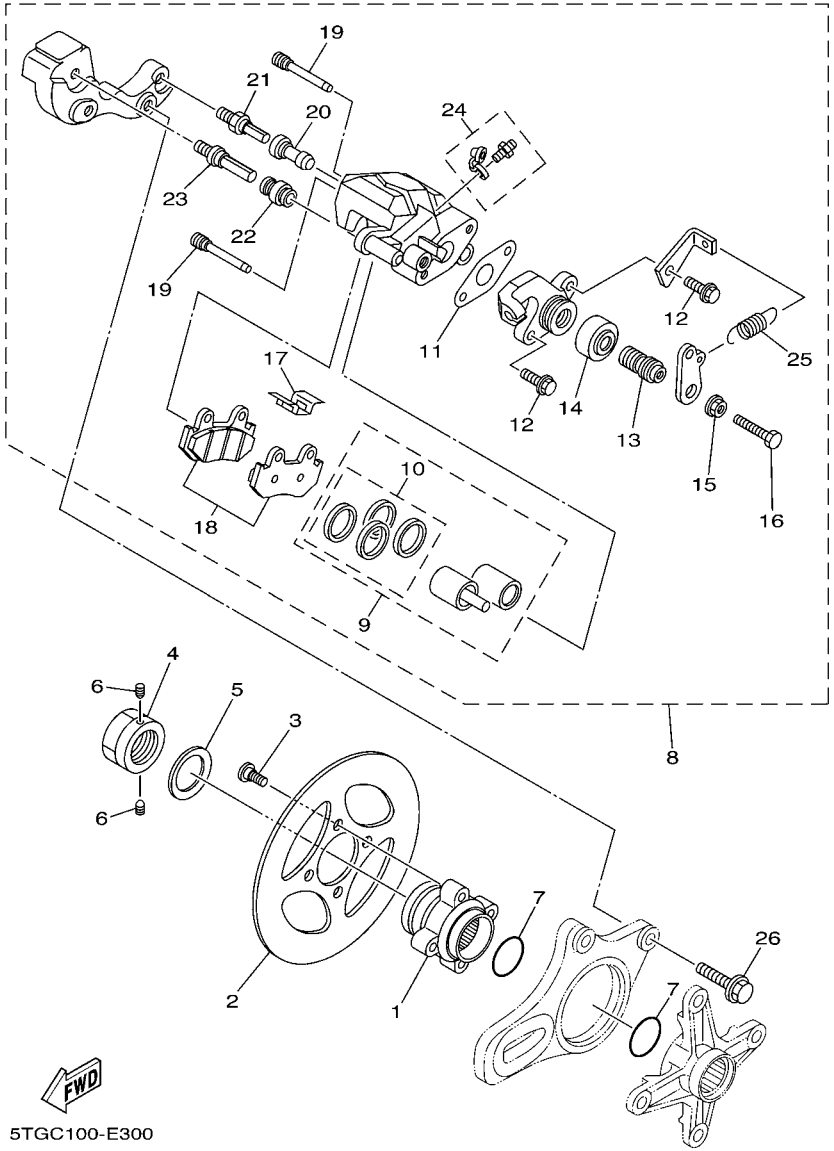

REF. NO.	PART NO.	DESCRIPTION	USA	CAN	EUR	OCE	JPN	REMARKS
1	1S3–25712–00	BRACKET, DISC	1	1	1	1	1	
2	1S3–2582W–00	DISK, REAR BRAKE 2	1	1	1	1	1	
3	90109–08076	BOLT	4	4	4	4	4	
4	90179–36002	NUT	1	1	1	1	1	
5	90208–37001	WASHER, CONICAL SPRING	1	1	1	1	1	
6	90113–06055	BOLT, SET	2	2	2	2	2	
7	93210–36769	O-RING	2	2	2	2	2	
8	5TG–2580W–20	CALIPER ASSY, REAR 2	1	1	1	1	1	
9	5TG–W0057–10	.PISTON ASSY, CALIPER	1	1	1	1	1	
10	5TG–W0047–00	..CALIPER SEAL KIT	1	1	1	1	1	
11	5TG–25975–00	.RUBBER, BUSHING	1	1	1	1	1	
12	5UG–25833–00	.BOLT, FITTING	2	2	2	2	2	
13	5TG–25978–00	.SHAFT L	1	1	1	1	1	
14	1UY–25974–51	.BOOT	1	1	1	1	1	
15	1UY–25973–51	.NUT	1	1	1	1	1	
16	5TG–25972–00	.ADJUSTBOLT	1	1	1	1	1	
17	3LD–25934–01	.SPRING, PAD	1	1	1	1	1	
18	5TG–W0046–10	.BRAKE PAD KIT 2	1	1	1	1	1	
19	5DH–25933–00	.PIN, PAD	2	2	2	2	2	
20	1UY–25937–51	.BOOT 2	1	1	1	1	1	
21	3SP–25914–51	.PIN, SLIDE	1	1	1	1	1	
22	3JD–25917–00	.BOOT, CALIPER	1	1	1	1	1	
23	3SP–25926–51	.BOLT	1	1	1	1	1	
24	1UY–W0048–50	.BLEED SCREW KIT	1	1	1	1	1	
25	5TG–25977–50	.SPRING, RETURN	1	1	1	1	1	
26	90105–101A9	BOLT, FLANGE	2	2	2	2	2	

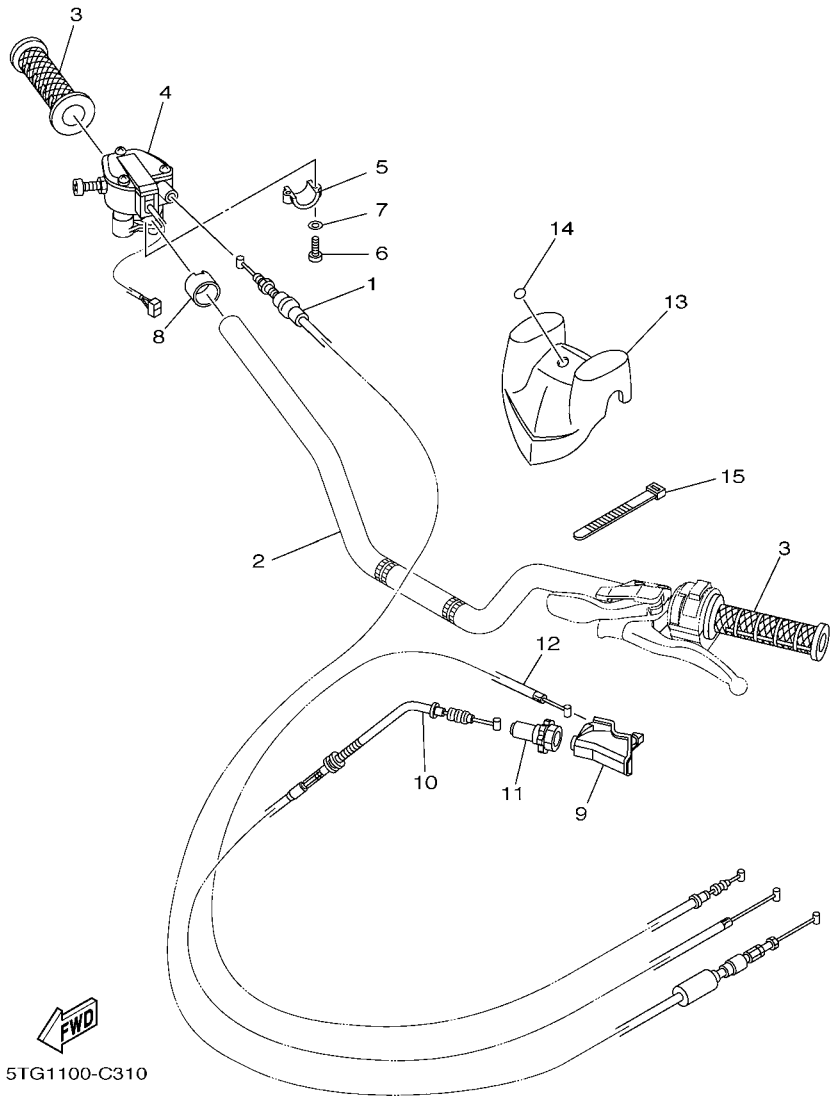

FIG. 31 STEERING HANDLE & CABLE

REF. NO.	PART NO.	DESCRIPTION	USA	CAN	EUR	OCE	JPN	REMARKS
1	5TG–26311–00	CABLE, THROTTLE 1	1	1	1	1	1	
2	5TG–26111–20	HANDLEBAR	1	1	1	1	1	
3	5LP–26241–00	GRIP	2	2	2	2	2	
4	5TG–26250–10	THROTTLE LEVER ASSY	1	1	1	1	1	
5	4V4–82913–00	HOLDER, LEVER LOWER 1	1	1	1	1	1	
6	98507–05020	SCREW, PAN HEAD	2	2	2	2	2	
7	92907–05100	WASHER, SPRING	2	2	2	2	2	
8	5TG–26259–00	COLLAR	1	1	1	1	1	
9	5TG–26372–00	COVER, HANDLE LEVER 1	1	1	1	1	1	
10	5TG–26335–20	CABLE, CLUTCH	1	1	1	1	1	
11	5HD–26342–00	BOOT, CABLE	1	1	1	1	1	
12	5TG–26341–20	CABLE, BRAKE	1	1	1	1	1	
13	5TG–26124–00	PROTECTOR, HANDLEBAR	1	1	1	1	1	
14	5GT–2836B–10	TUNING FORK MARK	1	1	1	1	1	
15	437–83936–01	BAND, SWITCH CORD	4	4	4	4	4	

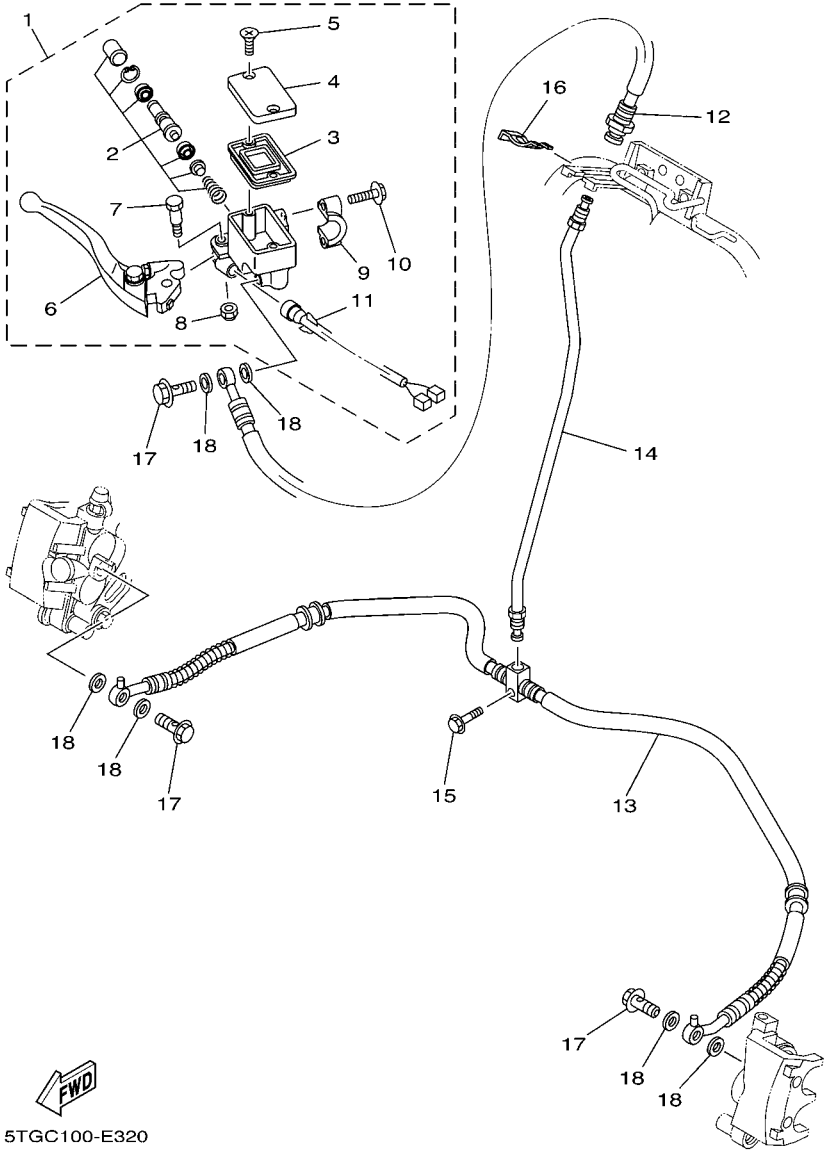

FIG. 32 FRONT MASTER CYLINDER

REF. NO.	PART NO.	DESCRIPTION	USA	CAN	EUR	OCE	JPN	REMARKS
1	5TG–2583T–10	MASTER CYLINDER ASSY	1	1	1	1	1	
2	5LP–W0041–00	.CYLINDER KIT, MASTER	1	1	1	1	1	
3	4L0–25854–00	.DIAPHRAGM, RESERVOIR	1	1	1	1	1	
4	5LP–25852–01	.CAP, RESERVOIR	1	1	1	1	1	
5	4NK–2589H–00	.SCREW	2	2	2	2	2	
6	5TG–83922–10	.LEVER 2	1	1	1	1	1	
7	5MV–2589F–00	.BOLT, LEVER	1	1	1	1	1	
8	95604–06100	.NUT, U	1	1	1	1	1	
9	5LP–25867–00	.BRACKET, MASTER CYLINDER	1	1	1	1	1	
10	5MV–25833–00	.BOLT, FITTING	2	2	2	2	2	
11	5LP–83980–00	.FRONT STOP SWITCH ASSY	1	1	1	1	1	
12	5TG–25872–00	HOSE, BRAKE 1	1	1	1	1	1	
13	5TG–25873–00	HOSE, BRAKE 2	1	1	1	1	1	
14	5TG–25871–00	PIPE, BRAKE	1	1	1	1	1	
15	95827–06025	BOLT, FLANGE	1	1	1	1	1	
16	2GU–25866–00	CIRCLIP	1	1	1	1	1	
17	90401–10159	BOLT, UNION	3	3	3	3	3	
18	90201–10118	WASHER, PLATE	6	6	6	6	6	

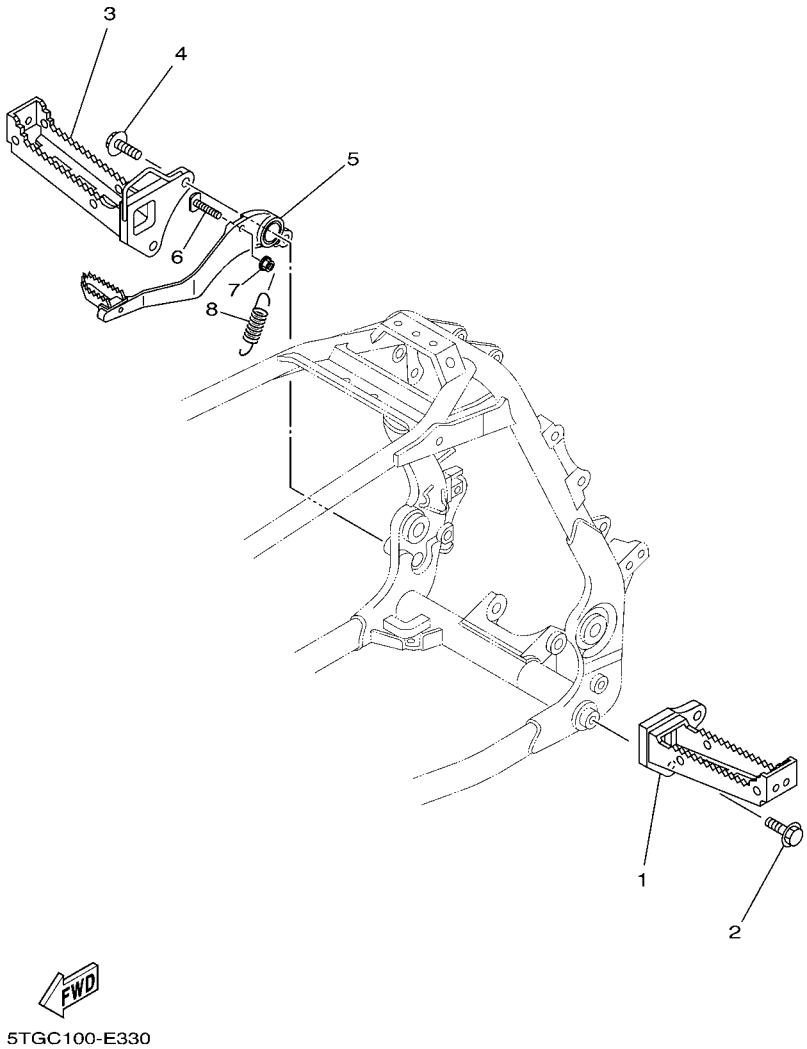

FIG. 33 STAND & FOOTREST

REF. NO.	PART NO.	DESCRIPTION	USA	CAN	EUR	OCE	JPN	REMARKS
1	5TG–27411–01	FOOTREST 1	1	1	1	1	1	
2	95817–10025	BOLT, FLANGE	2	2	2	2	2	
3	5TG–27421–01	FOOTREST 2	1	1	1	1	1	
4	95817–10035	BOLT, FLANGE	2	2	2	2	2	
5	5TG–27211–10	PEDAL, BRAKE	1	1	1	1	1	
6	5TG–27813–10	PIN, PEDAL CRANK	1	1	1	1	1	
7	95602–06200	NUT, SELF-LOCKING	1	1	1	1	1	
8	90506–20380	SPRING, TENSION	1	1	1	1	1	

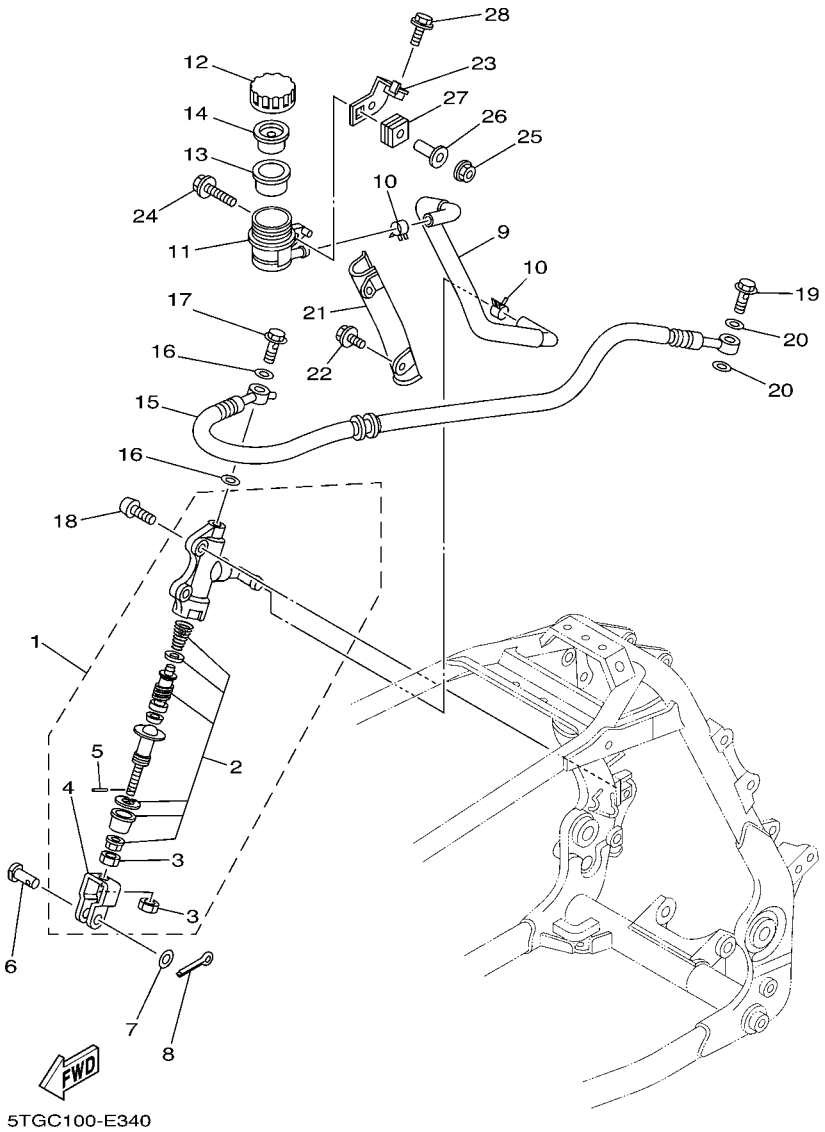

FIG. 34 REAR MASTER CYLINDER

REF. NO.	PART NO.	DESCRIPTION	USA	CAN	EUR	OCE	JPN	REMARKS
1	5TG–2580E–20	REAR MASTER CYLINDER ASSY	1	1	1	1	1	
2	5TG–W0042–50	.CYLINDER KIT, MASTER	1	1	1	1	1	
3	4SS–27218–00	.NUT	2	2	2	2	2	
4	2YK–27222–00	.JOINT	1	1	1	1	1	
5	3KW–27234–00	.PIN, BRAKE ROD	1	1	1	1	1	
6	90240–08124	PIN, CLEVIS	1	1	1	1	1	
7	90201–08083	WASHER, PLATE	1	1	1	1	1	
8	91401–16012	PIN, COTTER	1	1	1	1	1	
9	5TG–25895–10	HOSE, RESERVOIR	1	1	1	1	1	
10	90467–11044	CLIP	2	2	2	2	2	
11	5TG–25894–00	TANK, RESERVOIR	1	1	1	1	1	
12	3XP–25852–50	CAP, RESERVOIR	1	1	1	1	1	
13	2VN–25854–00	DIAPHRAGM, RESERVOIR	1	1	1	1	1	
14	2VN–25855–00	BUSH,DIAPHRAGM	1	1	1	1	1	
15	5TG–25874–20	HOSE, BRAKE	1	1	1	1	1	
16	90201–10118	WASHER, PLATE	2	2	2	2	2	
17	90401–10159	BOLT, UNION	1	1	1	1	1	
18	92012–08025	BOLT, BUTTON HEAD	2	2	2	2	2	
19	90401–10159	BOLT, UNION	1	1	1	1	1	
20	90201–10118	WASHER, PLATE	2	2	2	2	2	
21	5TG–2587A–00	HOLDER, BRAKE HOSE	1	1	1	1	1	
22	95022–06010	BOLT, FLANGE	2	2	2	2	2	
23	5TG–21228–10	BRACKET, RESERVE TANK	1	1	1	1	1	
24	90105–05331	BOLT, FLANGE	1	1	1	1	1	
25	95607–05200	NUT, U FLANGE	1	1	1	1	1	
26	90387–05016	COLLAR	1	1	1	1	1	
27	90480–10011	GROMMET	1	1	1	1	1	

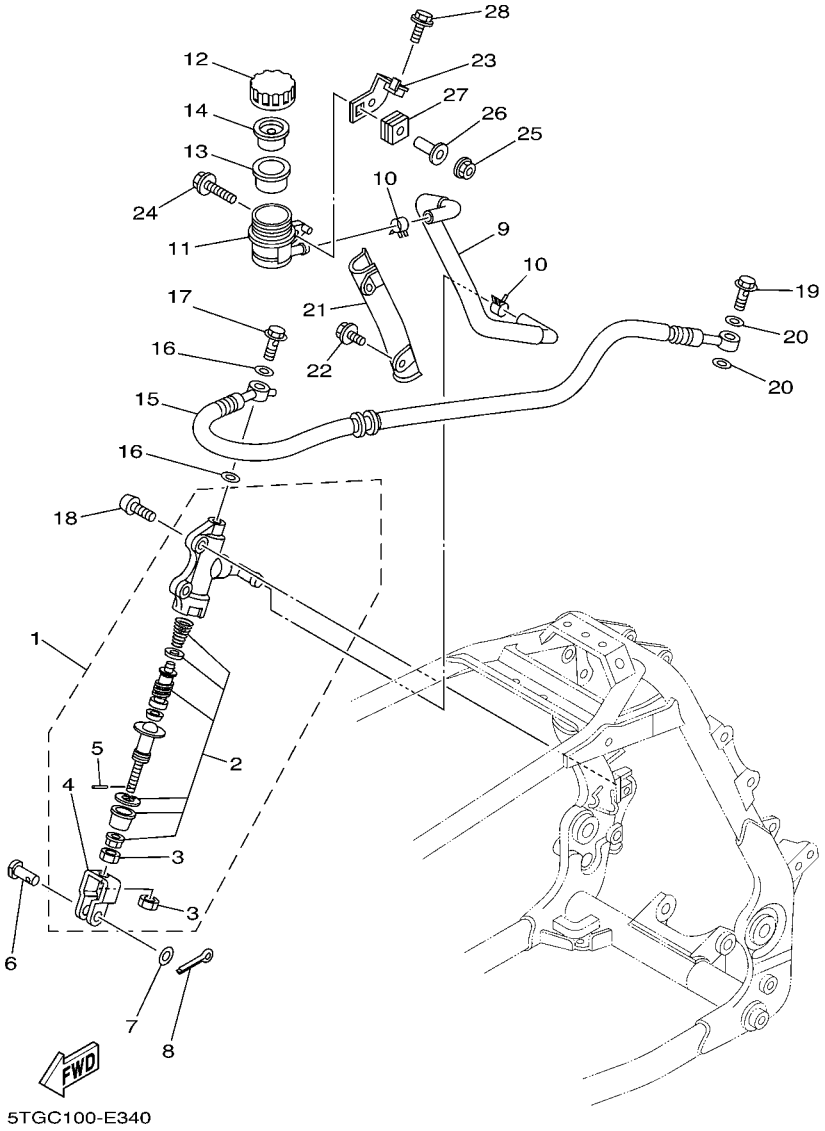

FIG. 34 REAR MASTER CYLINDER

REF. NO.	PART NO.	DESCRIPTION	USA	CAN	EUR	OCE	JPN	REMARKS
28	95807–06012	BOLT, FLANGE	1	1	1	1	1	

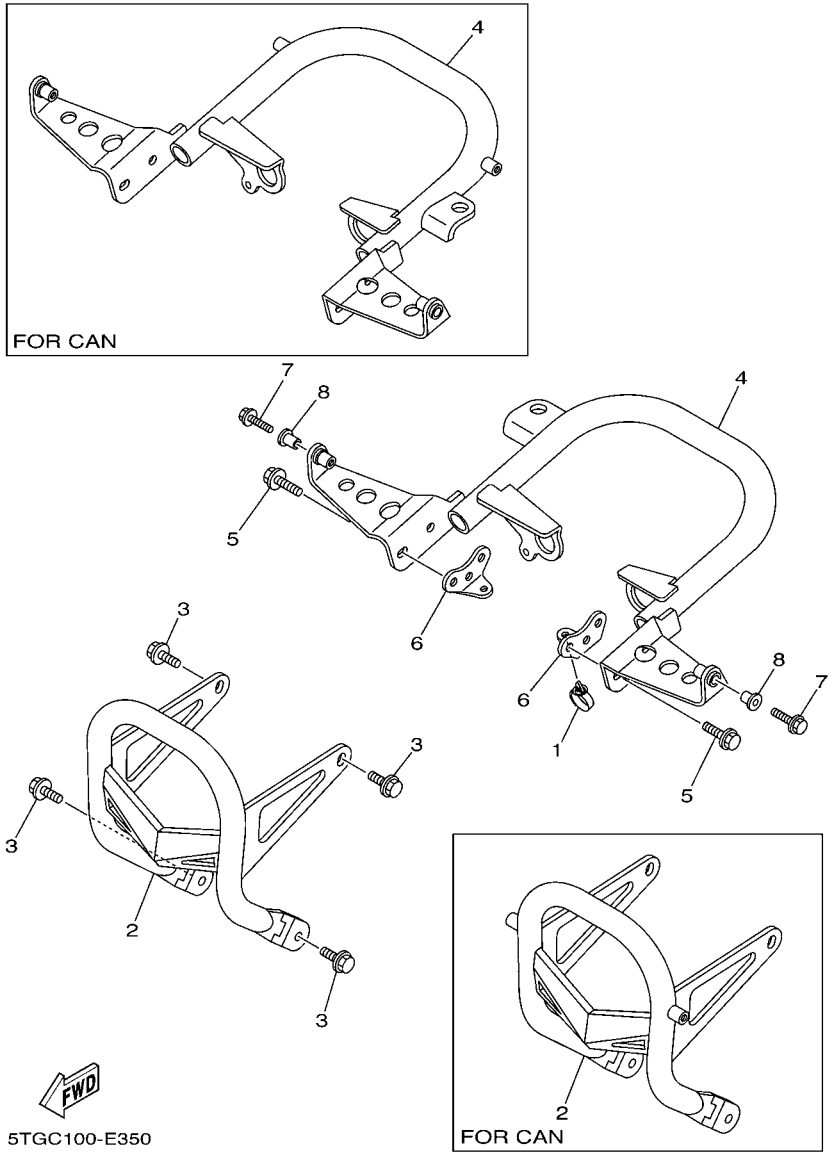

FIG. 35 GUARD

REF. NO.	PART NO.	DESCRIPTION	USA	CAN	EUR	OCE	JPN	REMARKS
1	90464–20181	CLAMP	1	1	1	1	1	
2	5TG–2845N–40	BAR, CARRY FRONT	1		1	1	1	
	5TG–2845N–50	BAR, CARRY FRONT		1				
3	95812–08014	BOLT, FLANGE	4	4	4	4	4	
4	5TG–2845R–40	BAR, CARRY REAR	1		1	1	1	
	5TG–2845R–50	BAR, CARRY REAR		1				
5	95812–08020	BOLT, FLANGE	4	4	4	4	4	
6	5TG–28215–00	WASHER, SPECIAL	2	2	2	2	2	
7	95807–06020	BOLT, FLANGE	2	2	2	2	2	
8	90387–06648	COLLAR	2	2	2	2	2	

FIG. 36 GENERATOR

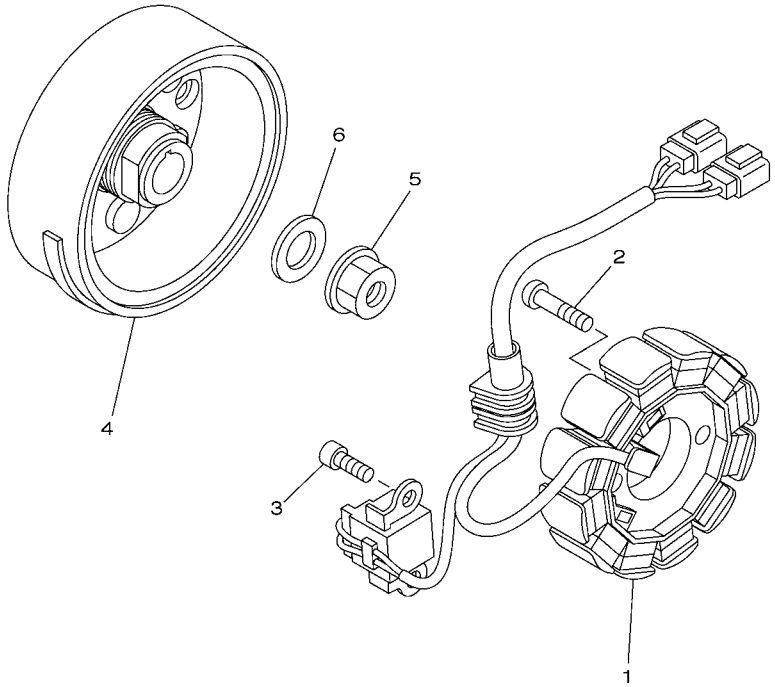

5TG1100-C360

REF. NO.	PART NO.	DESCRIPTION	USA	CAN	EUR	OCE	JPN	REMARKS
1	5TG–81410–02	STATOR ASSY	1	1	1	1	1	
2	90149–05283	SCREW	2	2	2	2	2	
3	91317–06014	BOLT	2	2	2	2	2	
4	5TG–81450–00	ROTOR ASSY	1	1	1	1	1	
5	90179–12657	NUT	1	1	1	1	1	
6	90201–12020	WASHER, PLATE	1	1	1	1	1	

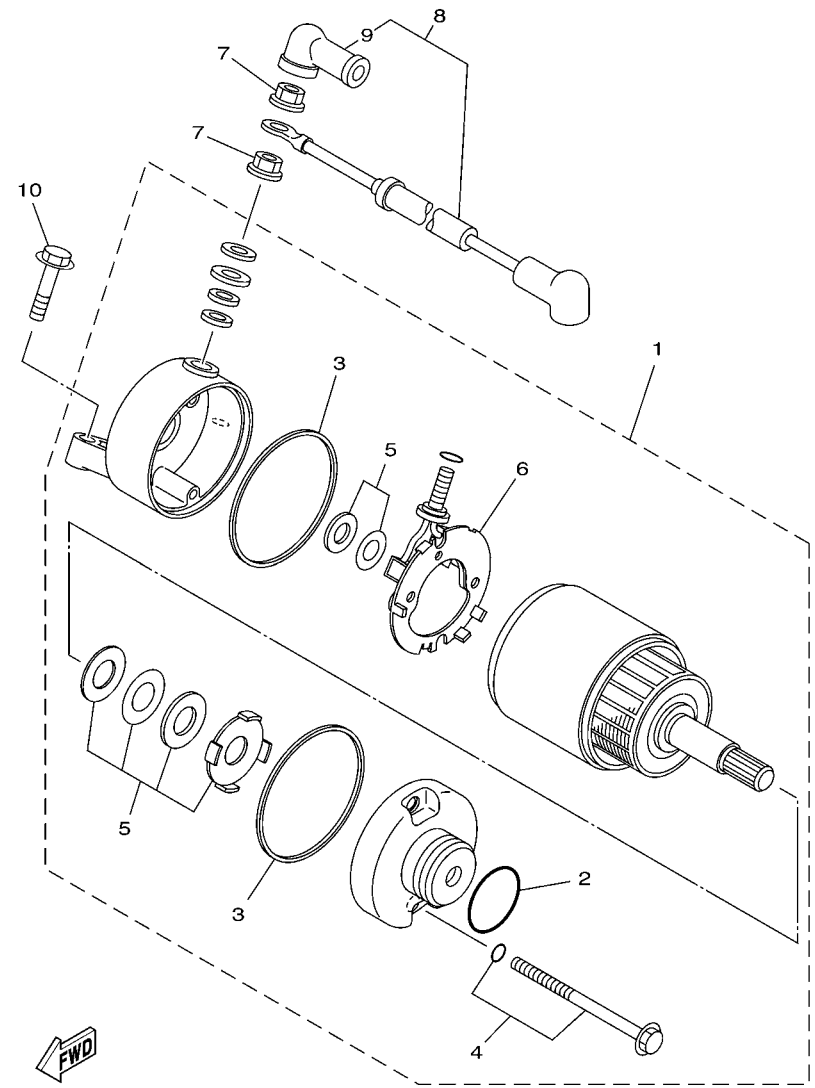

5TGC100-E370

FIG. 37 STARTING MOTOR

REF. NO.	PART NO.	DESCRIPTION	USA	CAN	EUR	OCE	JPN	REMARKS
1	5TG–81890–00	MOTOR ASSY	1	1	1	1	1	
2	1FK–81847–00	.O-RING	1	1	1	1	1	
3	4WP–81844–00	.GASKET	2	2	2	2	2	
4	4WP–81826–00	.BOLT	2	2	2	2	2	
5	3AJ–81809–00	.WASHER KIT	1	1	1	1	1	
6	5TG–81801–00	.BRUSH SET	1	1	1	1	1	
7	4XV–8182A–00	NUT	2	2	2	2	2	
8	5TG–81815–00	CORD, STARTER MOTOR	1	1	1	1	1	
9	4G0–81871–00	.CAP	1	1	1	1	1	
10	95027–06025	BOLT, FLANGE	2	2	2	2	2	

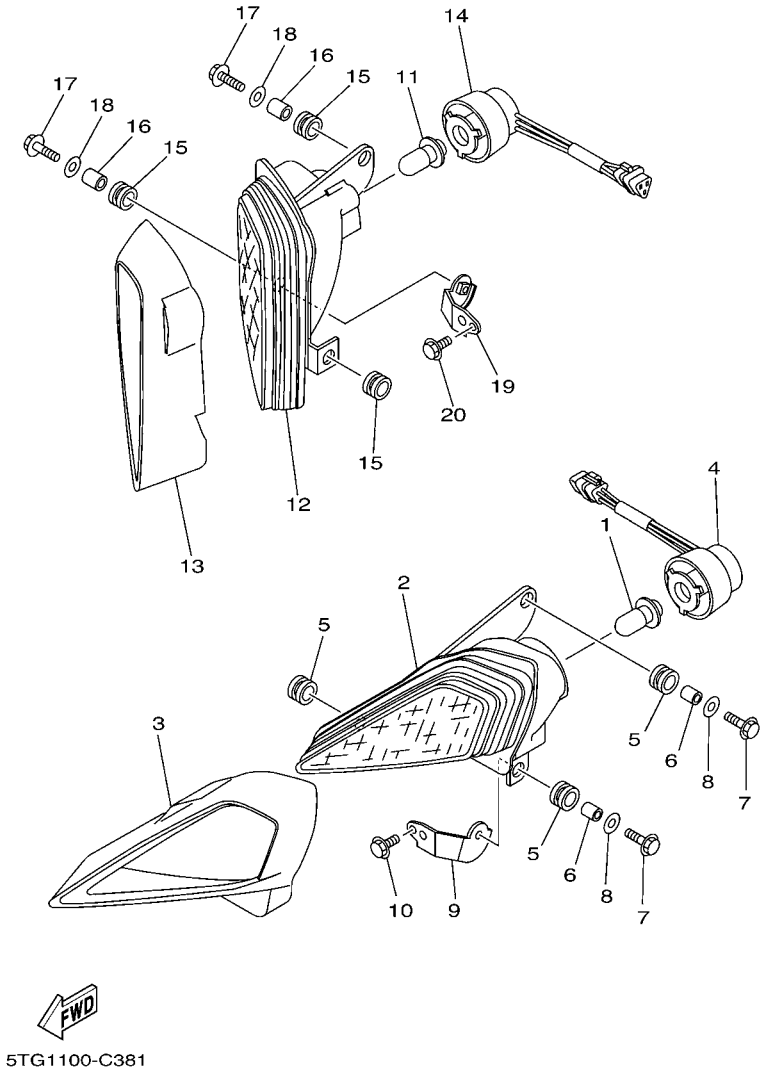

5TG1100-C381

FIG. 38 HEADLIGHT

REF. NO.	PART NO.	DESCRIPTION	USA	CAN	EUR	OCE	JPN	REMARKS
1	4KB–84314–01	BULB (12V-30/30W)	1	1	1	1	1	
2	5TG–84110–03	HEADLIGHT UNIT ASSY	1	1	1	1	1	
3	5TG–84165–01	RIM, HEADLIGHT COVER 1	1	1	1	1	1	
4	5TG–84140–01	SOCKET CORD ASSY	1	1	1	1	1	
5	90480–14102	GROMMET	3	3	3	3	3	
6	90387–07598	COLLAR	2	2	2	2	2	
7	95807–06025	BOLT, FLANGE	2	2	2	2	2	
8	90201–06557	WASHER, PLATE	2	2	2	2	2	
9	5TG–84118–00	STAY, HEADLIGHT 1	1	1	1	1	1	
10	95817–06014	BOLT, FLANGE	1	1	1	1	1	
11	4KB–84314–01	BULB (12V-30/30W)	1	1	1	1	1	
12	5TG–84310–03	HEADLIGHT UNIT ASSY	1	1	1	1	1	
13	5TG–84166–01	RIM, HEADLIGHT COVER 2	1	1	1	1	1	
14	5TG–84340–01	SOCKET CORD ASSY 1	1	1	1	1	1	
15	90480–14102	GROMMET	3	3	3	3	3	
16	90387–07598	COLLAR	2	2	2	2	2	
17	95807–06025	BOLT, FLANGE	2	2	2	2	2	
18	90201–06557	WASHER, PLATE	2	2	2	2	2	
19	5TG–84119–00	STAY, HEADLIGHT 2	1	1	1	1	1	
20	95817–06014	BOLT, FLANGE	1	1	1	1	1	

FIG. 39 TAILLIGHT

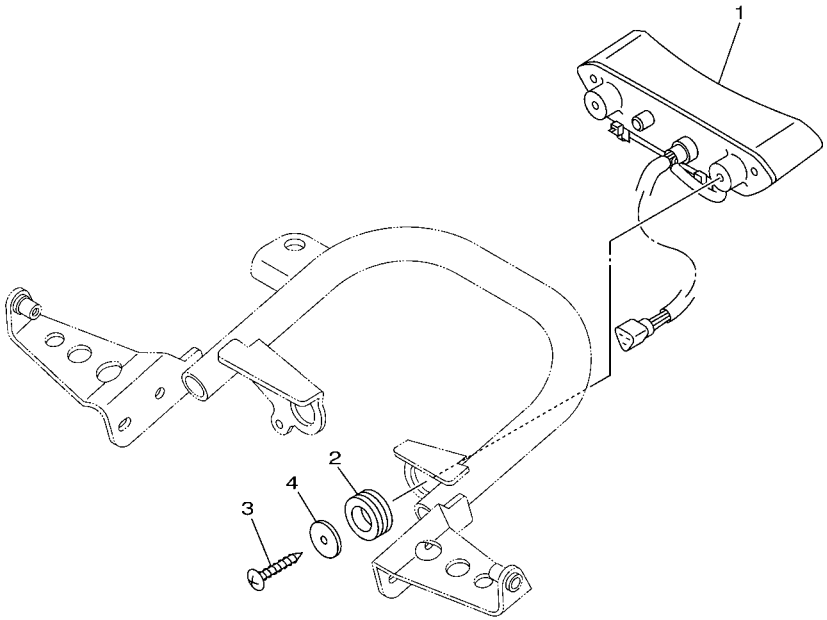

5TGC100-E390

REF. NO.	PART NO.	DESCRIPTION	USA	CAN	EUR	OCE	JPN	REMARKS
1	5TG–84710–20	TAILLIGHT UNIT ASSY	1			1	1	
2	90480–25001	GROMMET	2			2	2	
3	97707–50016	SCREW, TAPPING	2			2	2	
4	90201–056G0	WASHER, PLATE	2			2	2	

FIG. 40 TAILLIGHT 2

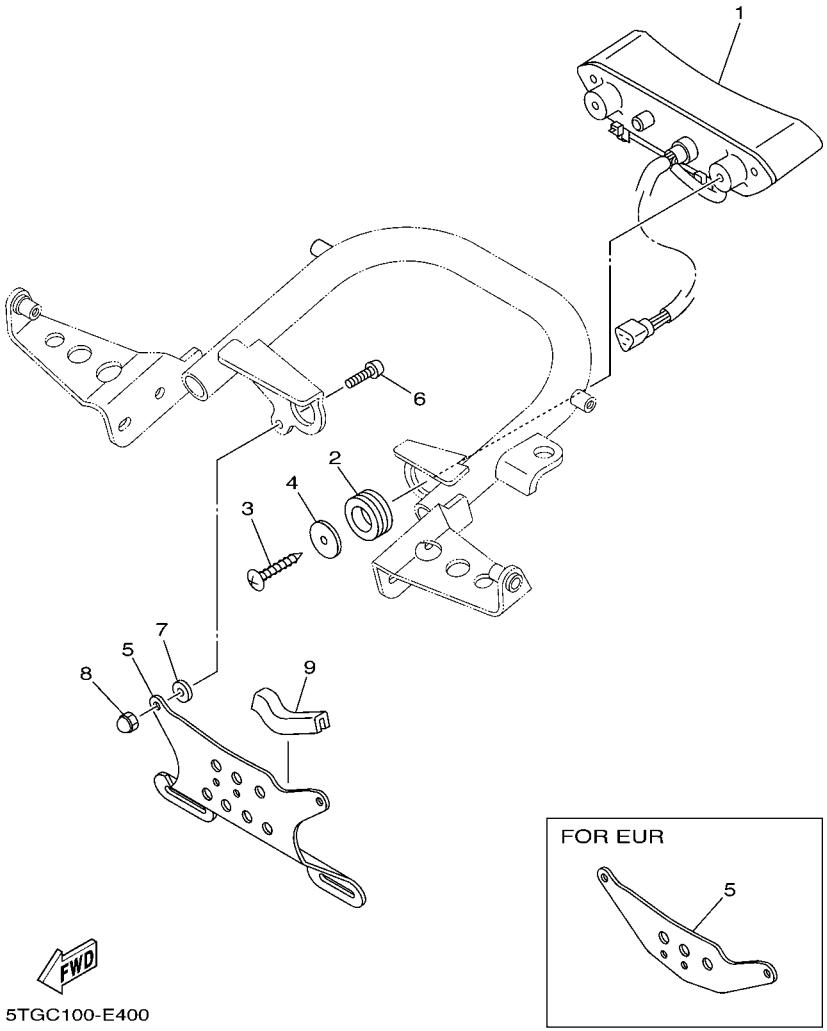

REF. NO.	PART NO.	DESCRIPTION	USA	CAN	EUR	OCE	JPN	REMARKS
1	5TG–84710–20	TAILLIGHT UNIT ASSY		1	1			
2	90480–25001	GROMMET		2	2			
3	97707–50016	SCREW, TAPPING		2	2			
4	90201–056G0	WASHER, PLATE		2	2			
5	5TG–84551–00	BRACKET, LICENCE		1				
	5TG–2481M–00	BRACKET, REFLECTOR 1			1			
6	92012–06016	BOLT, BUTTON HEAD		2	2			
7	90201–064R0	WASHER, PLATE		2	2			
8	90176–06041	NUT, CROWN		2	2			
9	5TG–84553–00	DAMPER		1	1			

FIG. 41 HANDLE SWITCH & LEVER

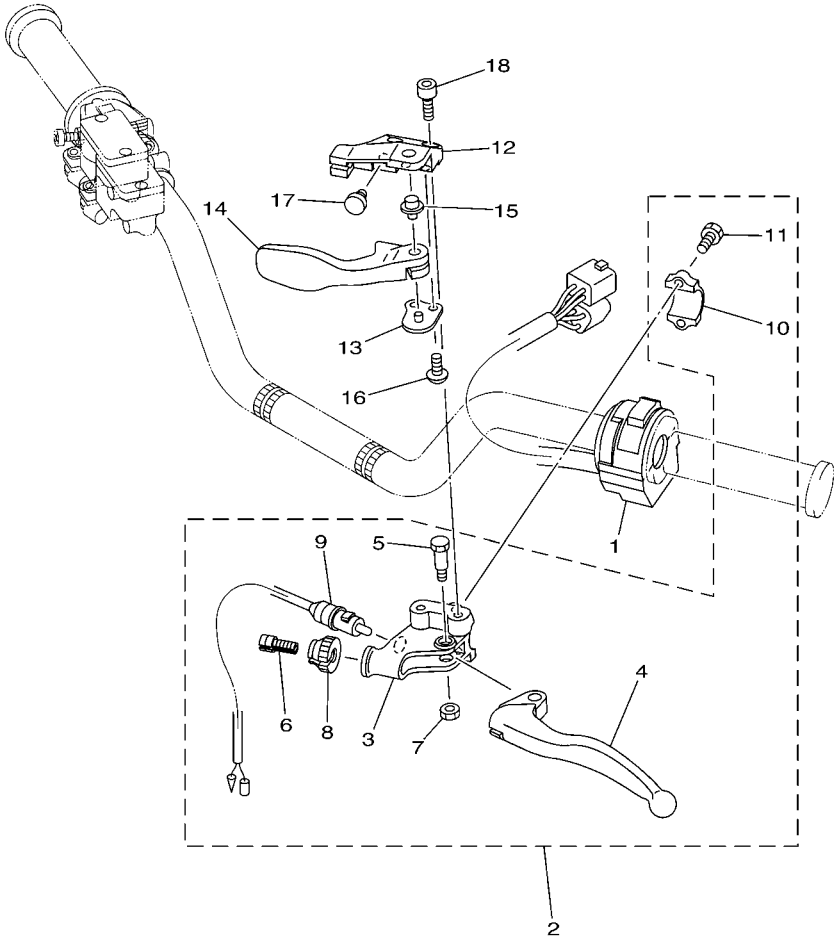

5TGC100-E410

REF. NO.	PART NO.	DESCRIPTION	USA	CAN	EUR	OCE	JPN	REMARKS
1	4KB–83973–00	SWITCH, HANDLE 3	1	1	1	1	1	
2	5TG–82910–00	LEVER HOLDER ASSY (LEFT)	1	1	1	1	1	
3	5TG–82911–00	.HOLDER, LEVER 1	1	1	1	1	1	
4	5TJ–83912–00	.LEVER 1	1	1	1	1	1	
5	90109–06027	.BOLT	1	1	1	1	1	
6	5TA–26337–00	.BOLT, ADJUSTING	1	1	1	1	1	
7	95607–06100	.NUT, U	1	1	1	1	1	
8	5HD–83951–00	.BOLT, CABLE ADJUSTING	1	1	1	1	1	
9	1UY–82917–00	.SWITCH	1	1	1	1	1	
10	5TG–82913–00	.HOLDER, LEVER LOWER 1	1	1	1	1	1	
11	97007–05016	.BOLT	2	2	2	2	2	
12	5TG–25727–00	BRACKET, LEVER	1	1	1	1	1	
13	5TG–25689–00	PLATE, GUIDE	1	1	1	1	1	
14	5TG–25726–00	LEVER, BRAKE	1	1	1	1	1	
15	5TG–83923–00	COLLAR, LEVER 2	1	1	1	1	1	
16	92017–06014	BOLT, BUTTON HEAD	2	2	2	2	2	
17	90338–07007	PLUG	1	1	1	1	1	
18	92014–06016	BOLT, BUTTON HEAD	2	2	2	2	2	

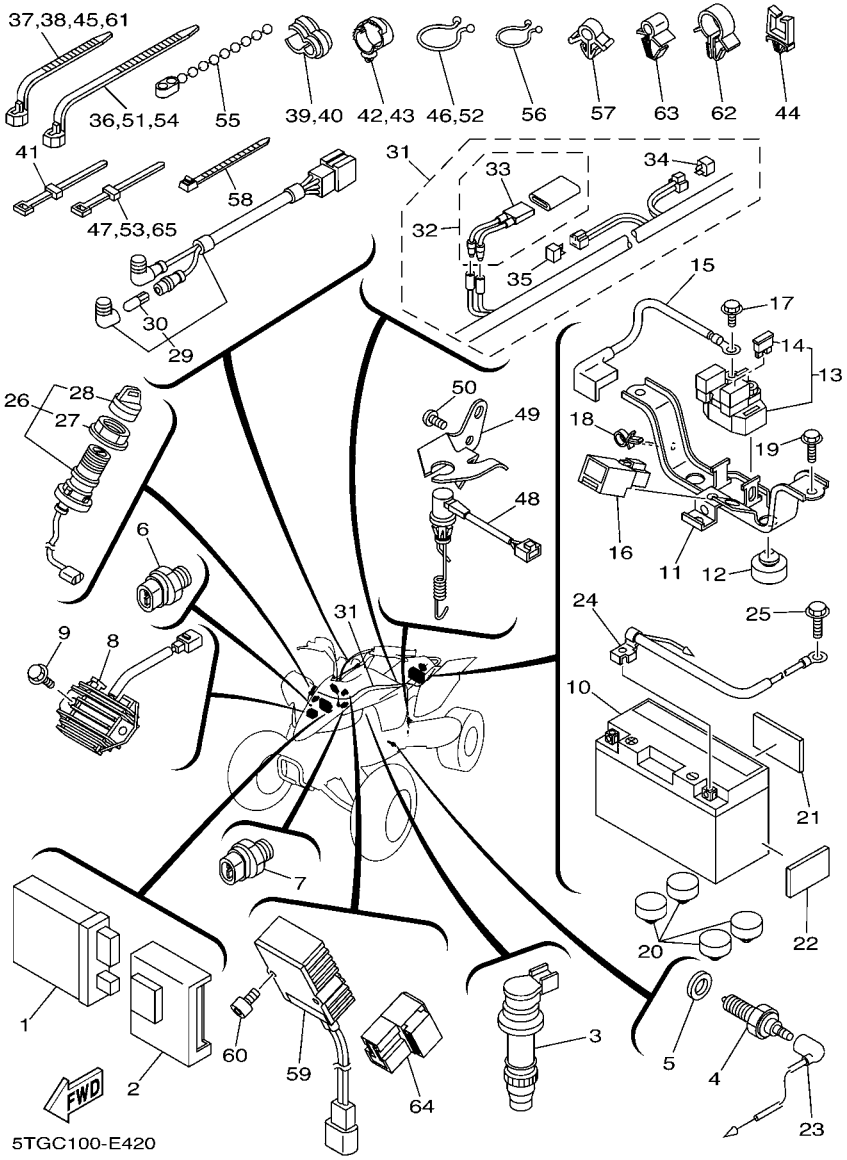

FIG. 42 ELECTRICAL 1

REF. NO.	PART NO.	DESCRIPTION	USA	CAN	EUR	OCE	JPN	REMARKS
1	5TG–85540–10	C.D.I. UNIT ASSY	1	1	1	1	1	
2	5TG–85546–00	BAND	1	1	1	1	1	
3	5TA–82310–10	IGNITION COIL ASSY	1	1	1	1	1	
4	3GB–82540–01	NEUTRAL SWITCH ASSY	1	1	1	1	1	
5	90430–10148	GASKET	1	1	1	1	1	
6	5EB–82560–00	THERMO SWITCH ASSY	1	1	1	1	1	
7	5LP–82560–00	THERMO SWITCH ASSY	1	1	1	1	1	
8	5TG–81960–00	RECTIFIER & REGULATOR ASSY	1	1	1	1	1	
9	95027–06020	BOLT, FLANGE	2	2	2	2	2	
10	4UC–82100–01	BATTERY (GS GT7B-4)	1	1	1	1		
	4GY–82100–01	BATTERY (GS GT7B-4)					1	
11	5TG–82128–10	BRACKET, BATTERY	1	1	1	1	1	
12	5TG–82121–10	PAD, BATTERY	2	2	2	2	2	
13	5JW–81940–02	STARTER RELAY ASSY	1	1	1	1	1	
14	36Y–82151–00	.FUSE (15A-BL)	2	2	2	2	2	
15	5TG–82115–00	WIRE, PLUS LEAD	1	1	1	1	1	
16	1RL–81950–92	RELAY ASSY	1	1	1	1	1	
17	95027–06008	BOLT, FLANGE	1	1	1	1	1	
18	90464–15157	CLAMP	1	1	1	1	1	
19	90105–06084	BOLT, FLANGE	2	2	2	2	2	
20	5TG–82121–10	PAD, BATTERY	4	4	4	4	4	
21	29W–82123–00	SEAT, BATTERY	1	1	1	1	1	
22	22F–2139X–00	DAMPER	3	3	3	3	3	
23	5TG–82541–00	WIRE, LEAD	1	1	1	1	1	
24	5TG–82116–00	WIRE, MINUS LEAD	1	1	1	1	1	
25	95027–06008	BOLT, FLANGE	1	1	1	1	1	
26	5TG–82510–00	MAIN SWITCH ASSY	1	1	1	1	1	

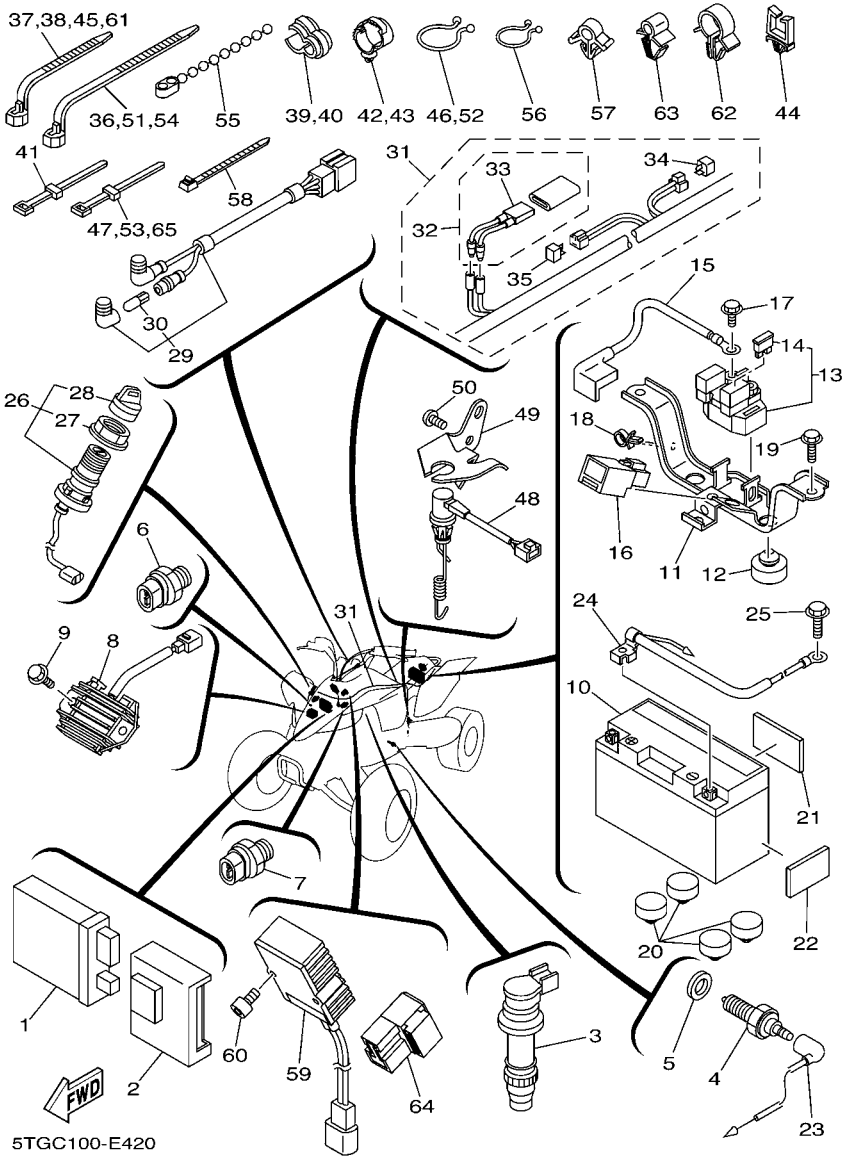

FIG. 42 ELECTRICAL 1

REF. NO.	PART NO.	DESCRIPTION	USA	CAN	EUR	OCE	JPN	REMARKS
27	3HN–82569–00	.NUT, MAIN SWITCH	1	1	1	1	1	
28	3HN–82579–00	.CAP, KEY	1	1	1	1	1	
29	5TG–83530–00	PILOT LIGHT ASSY	1	1	1	1	1	RED, GREEN LENS
30	5GH–83516–00	.BULB (14V-1.7W)	2	2	2	2	2	
31	5TG–82590–10	WIRE HARNESS ASSY	1	1	1	1	1	
32	5ND–82180–00	.CIRCUIT BREAKER ASSY	1	1	1	1	1	
33	5ND–82560–00	..THERMO SWITCH ASSY	1	1	1	1	1	
34	4WA–81980–00	.DIODE ASSY	1	1	1	1	1	
35	3WP–81980–00	.DIODE ASSY	1	1	1	1	1	
36	90464–15195	CLAMP	1	1	1	1	1	
37	90464–13073	CLAMP	2	2	2	2	2	
38	90464–13073	CLAMP	1	1	1	1	1	
39	90464–15065	CLAMP	1	1	1	1	1	
40	90464–15065	CLAMP	1	1	1	1	1	
41	437–83936–01	BAND, SWITCH CORD	1	1	1	1	1	
42	90464–20181	CLAMP	1	1	1	1	1	
43	90464–20181	CLAMP	1	1	1	1	1	
44	90464–20159	CLAMP	1	1	1	1	1	
45	90464–13073	CLAMP	1	1	1	1	1	
46	90464–30040	CLAMP	1	1	1	1	1	
47	3TB–83936–00	BAND, SWITCH CORD	1	1	1	1	1	
48	5TG–82530–10	STOP SWITCH ASSY	1	1	1	1	1	
49	5TG–2144G–10	STAY, STOP SWITCH	1	1	1	1	1	
50	98907–06012	SCREW, BIND	2	2	2	2	2	
51	90464–15195	CLAMP	1	1	1	1	1	
52	90464–30040	CLAMP	1	1	1	1	1	
53	3TB–83936–00	BAND, SWITCH CORD	1	1	1	1	1	

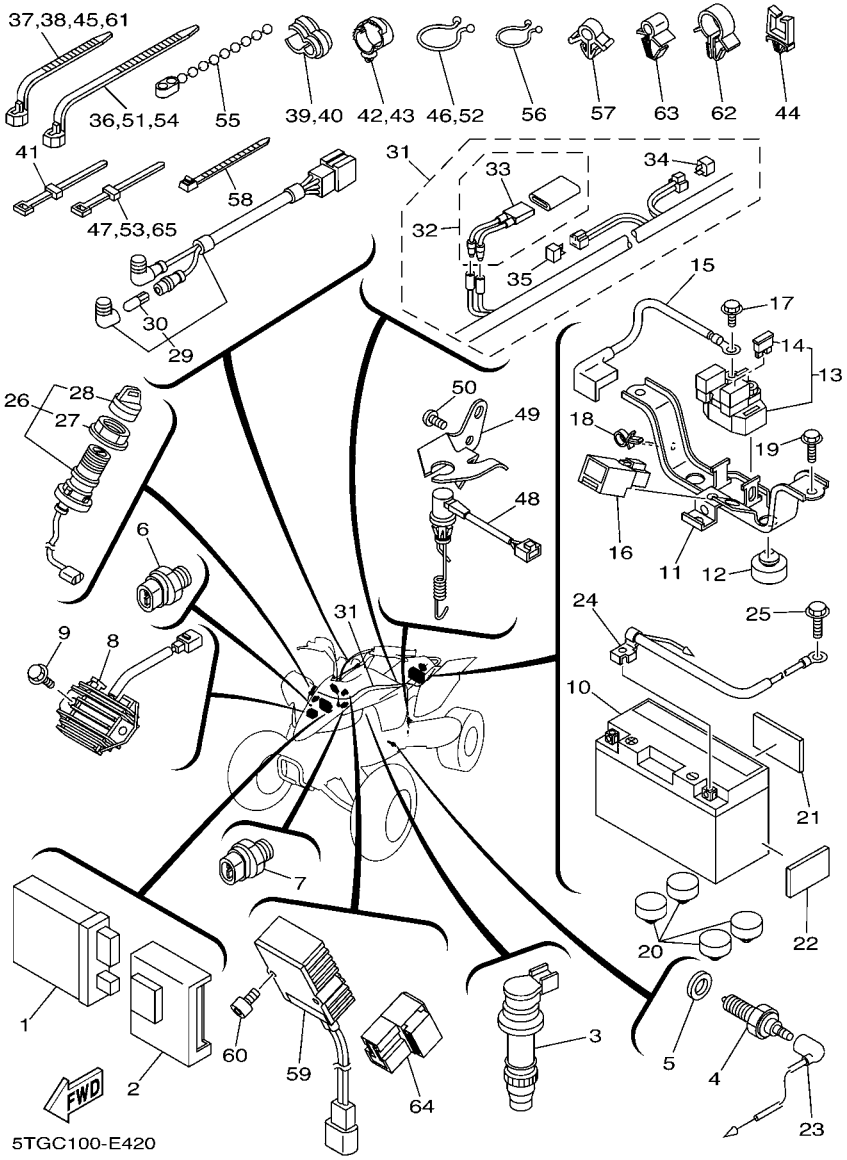

FIG. 42 ELECTRICAL 1

REF. NO.	PART NO.	DESCRIPTION	USA	CAN	EUR	OCE	JPN	REMARKS
54	90464–15195	CLAMP	1	1	1	1	1	
55	90464–20031	CLAMP	1	1	1	1	1	
56	90464–23041	CLAMP	1	1	1	1	1	
57	90464–48174	CLAMP	1	1	1	1	1	
58	90465–13M11	CLAMP	1	1	1	1	1	
59	5TG–85370–00	RESISTOR ASSY	1	1	1	1	1	
60	91312–05010	BOLT	2	2	2	2	2	
61	90464–13073	CLAMP	2	2	2	2	2	
62	90464–15157	CLAMP	1	1	1	1	1	
63	90464–48174	CLAMP	1	1	1	1	1	
64	5DM–81950–00	RELAY ASSY (G8HN-1C4T-DJ-Y52)	2	2	2	2	2	
65	3TB–83936–00	BAND, SWITCH CORD	1	1	1	1	1	

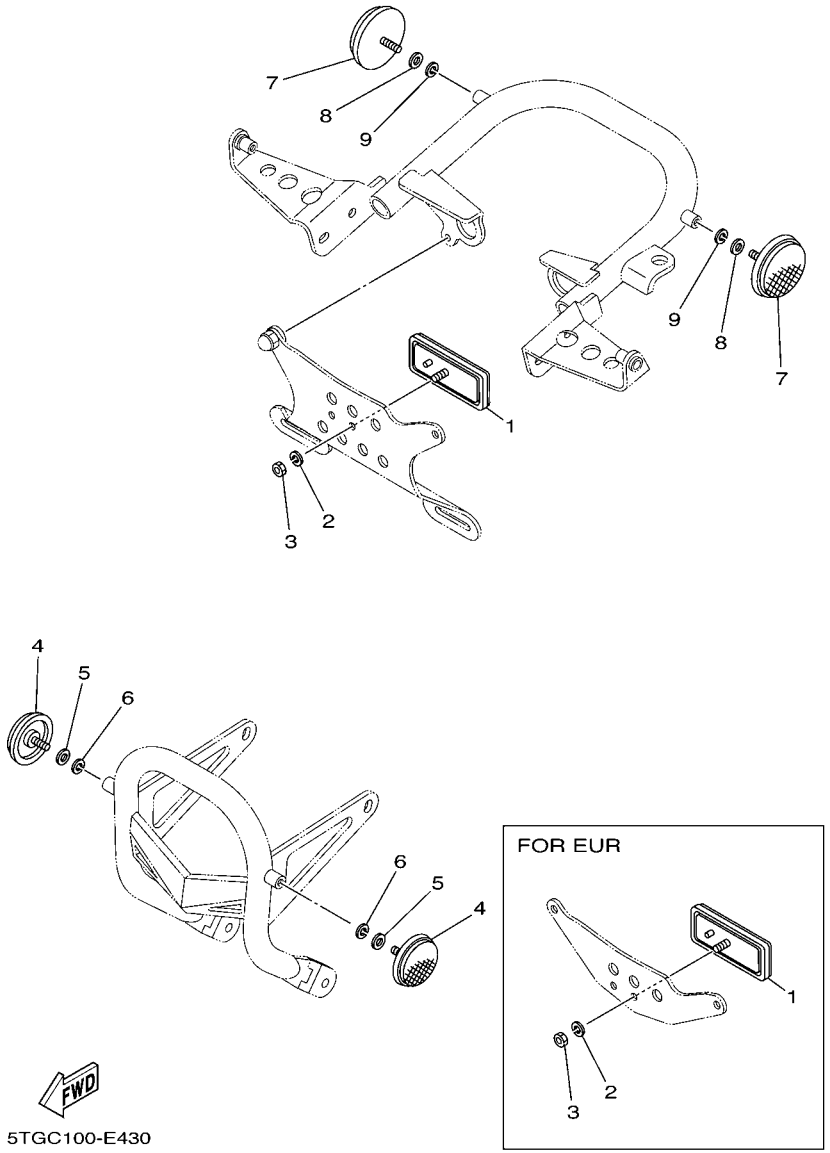

FIG. 43 ELECTRICAL 2

REF. NO.	PART NO.	DESCRIPTION	USA	CAN	EUR	OCE	JPN	REMARKS
1	3Y6–85130–02	REAR REFLECTOR ASSY		1	1			
2	92907–05100	WASHER, SPRING		1	1			
3	95307–05600	NUT		1	1			
4	2EK–85111–00	REFLECTOR, FRONT 1		2				
5	92907–05200	WASHER		2				
6	92907–05100	WASHER, SPRING		2				
7	449–85131–02	REFLECTOR, REAR 1		2				
8	92907–05200	WASHER		2				
9	92907–05100	WASHER, SPRING		2				

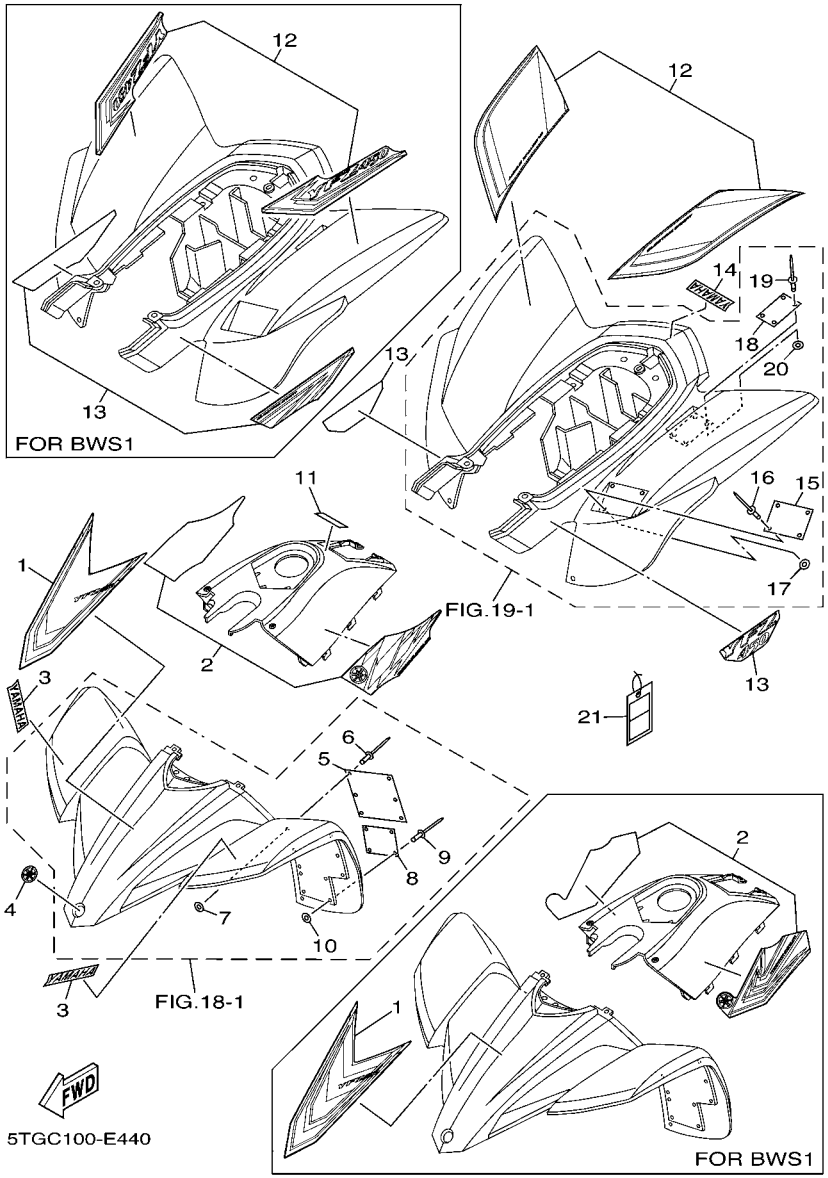

FIG. 44 EMBLEM & LABEL 1

REF. NO.	PART NO.	DESCRIPTION	USA	CAN	EUR	OCE	JPN	REMARKS
1	5TG–21569–70	GRAPHIC 1	1					UR FOR DPBSE
	5TG–21569–80	GRAPHIC 1	1					UR FOR BWS1
2	5TG–24250–70	GRAPHIC SET	1					UR FOR DPBSE
	5TG–24250–80	GRAPHIC SET	1					UR FOR BWS1
3	3GD–2153E–00	EMBLEM, YAMAHA	2					UR FOR DPBSE
	3GD–2153E–10	EMBLEM, YAMAHA	2					UR FOR BWS1
4	4KN–2836B–10	TUNING FORK MARK	1					
5	5FE–21568–01	LABEL, WARNING	1					ENGLISH
6	90267–32004	RIVET, BLIND	6					
7	90201–03313	WASHER, PLATE	6					
8	5FE–21697–01	LABEL, CAUTION 2	1					ENGLISH
9	90267–32004	RIVET, BLIND	4					
10	90201–03313	WASHER, PLATE	4					
11	5PW–2415E–11	LABEL, CAUTION	1					ENGLISH
12	5TG–2165A–50	GRAPHIC SET,REAR FENDER	1					UR FOR DPBSE
	5TG–2165A–60	GRAPHIC SET,REAR FENDER	1					UR FOR BWS1
13	5TG–2163G–30	EMBLEM 1	2					UR FOR DPBSE
	5TG–2165B–30	GRAPHIC SET,REAR FENDER	1					UR FOR BWS1
14	4ES–2153E–01	EMBLEM, YAMAHA	1					UR FOR DPBSE
	4ES–2153E–10	EMBLEM, YAMAHA	1					UR FOR BWS1
15	5TG–21696–30	LABEL, CAUTION	1					
16	90267–32004	RIVET, BLIND	4					
17	90201–03313	WASHER, PLATE	4					
18	5FE–2151H–01	LABEL 5	1					ENGLISH
19	90267–32004	RIVET, BLIND	4					
20	90201–03313	WASHER, PLATE	4					
21	5LP–2819R–00	TAG, WARNING	1					

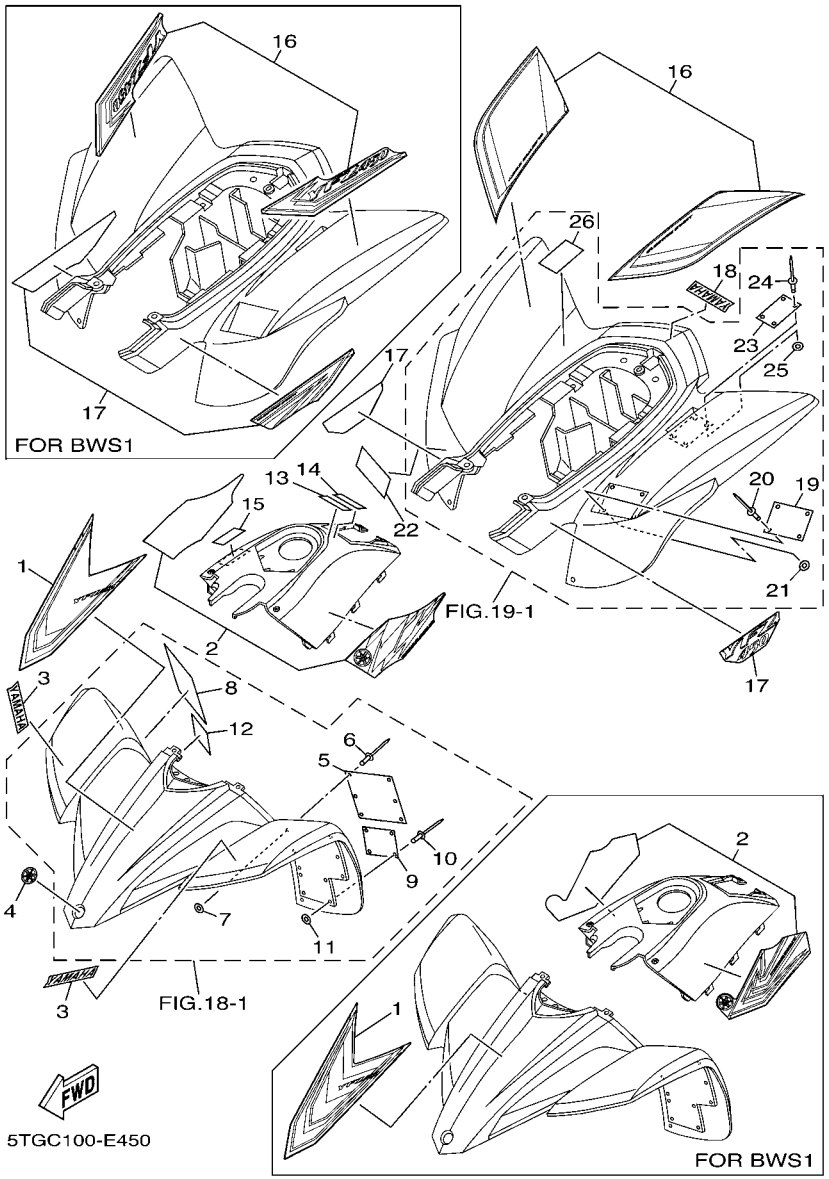

FIG. 45 EMBLEM & LABEL 2

REF. NO.	PART NO.	DESCRIPTION	USA	CAN	EUR	OCE	JPN	REMARKS
1	5TG–21569–70	GRAPHIC 1		1				UR FOR DPBSE
	5TG–21569–80	GRAPHIC 1		1				UR FOR BWS1
2	5TG–24250–70	GRAPHIC SET		1				UR FOR DPBSE
	5TG–24250–80	GRAPHIC SET		1				UR FOR BWS1
3	3GD–2153E–00	EMBLEM, YAMAHA		2				UR FOR DPBSE
	3GD–2153E–10	EMBLEM, YAMAHA		2				UR FOR BWS1
4	4KN–2836B–10	TUNING FORK MARK		1				
5	5FE–21568–01	LABEL, WARNING		1				ENGLISH
6	90267–32004	RIVET, BLIND		6				
7	90201–03313	WASHER, PLATE		6				
8	4WU–21568–10	LABEL, WARNING		1				FRENCH
9	5FE–21697–01	LABEL, CAUTION 2		1				ENGLISH
10	90267–32004	RIVET, BLIND		4				
11	90201–03313	WASHER, PLATE		4				
12	3JM–21697–10	LABEL, CAUTION 2		1				FRENCH
13	5PW–2415E–11	LABEL, CAUTION		1				ENGLISH
14	5PW–2415E–21	LABEL, CAUTION		1				FRENCH
15	4SH–2416E–00	LABEL, CAUTION CANADA		1				ENGLISH
16	5TG–2165A–50	GRAPHIC SET,REAR FENDER		1				UR FOR DPBSE
	5TG–2165A–60	GRAPHIC SET,REAR FENDER		1				UR FOR BWS1
17	5TG–2163G–30	EMBLEM 1		2				UR FOR DPBSE
	5TG–2165B–30	GRAPHIC SET,REAR FENDER		1				UR FOR BWS1
18	4ES–2153E–01	EMBLEM, YAMAHA		1				UR FOR DPBSE
	4ES–2153E–10	EMBLEM, YAMAHA		1				UR FOR BWS1
19	5TG–21696–30	LABEL, CAUTION		1				
20	90267–32004	RIVET, BLIND		4				
21	90201–03313	WASHER, PLATE		4				

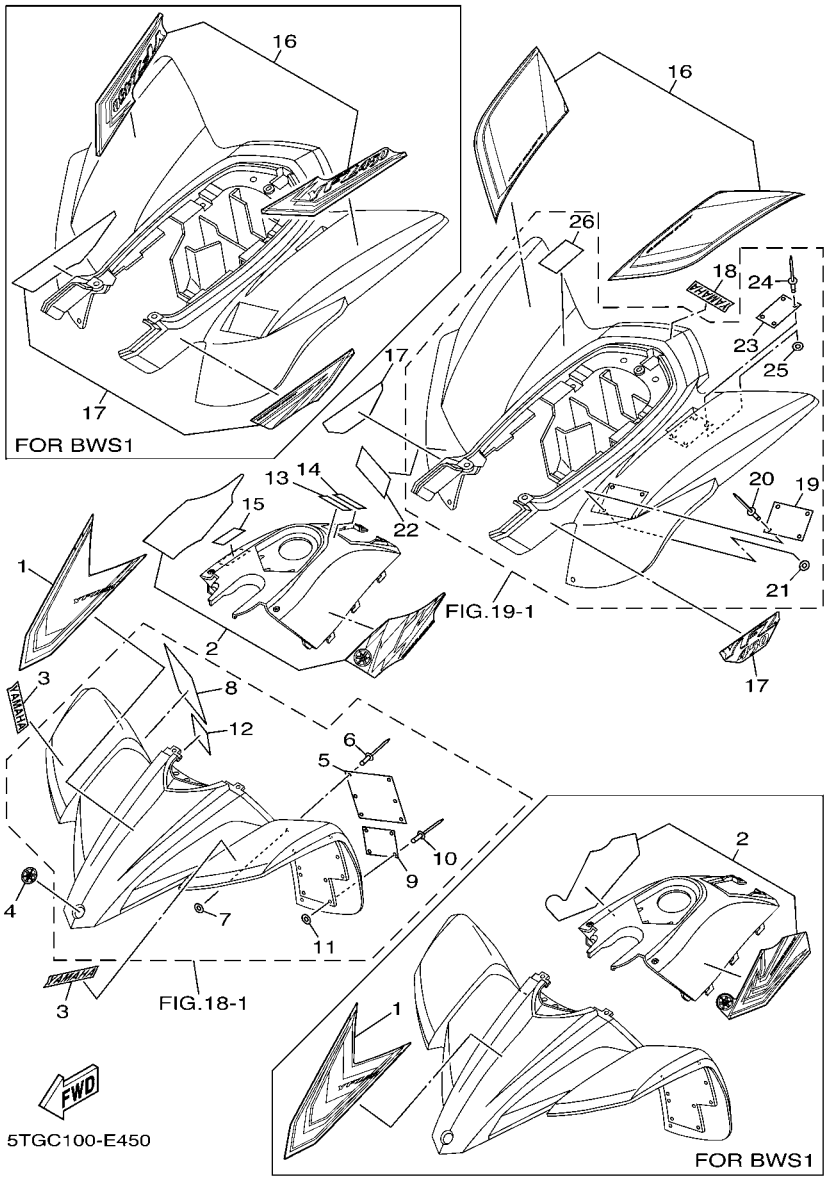

FIG. 45 EMBLEM & LABEL 2

REF. NO.	PART NO.	DESCRIPTION	USA	CAN	EUR	OCE	JPN	REMARKS
22	5TG–21696–50	LABEL, CAUTION		1				
23	5FE–2151H–01	LABEL 5		1				ENGLISH
24	90267–32004	RIVET, BLIND		4				
25	90201–03313	WASHER, PLATE		4				
26	4WU–2151H–10	LABEL 5		1				FRENCH

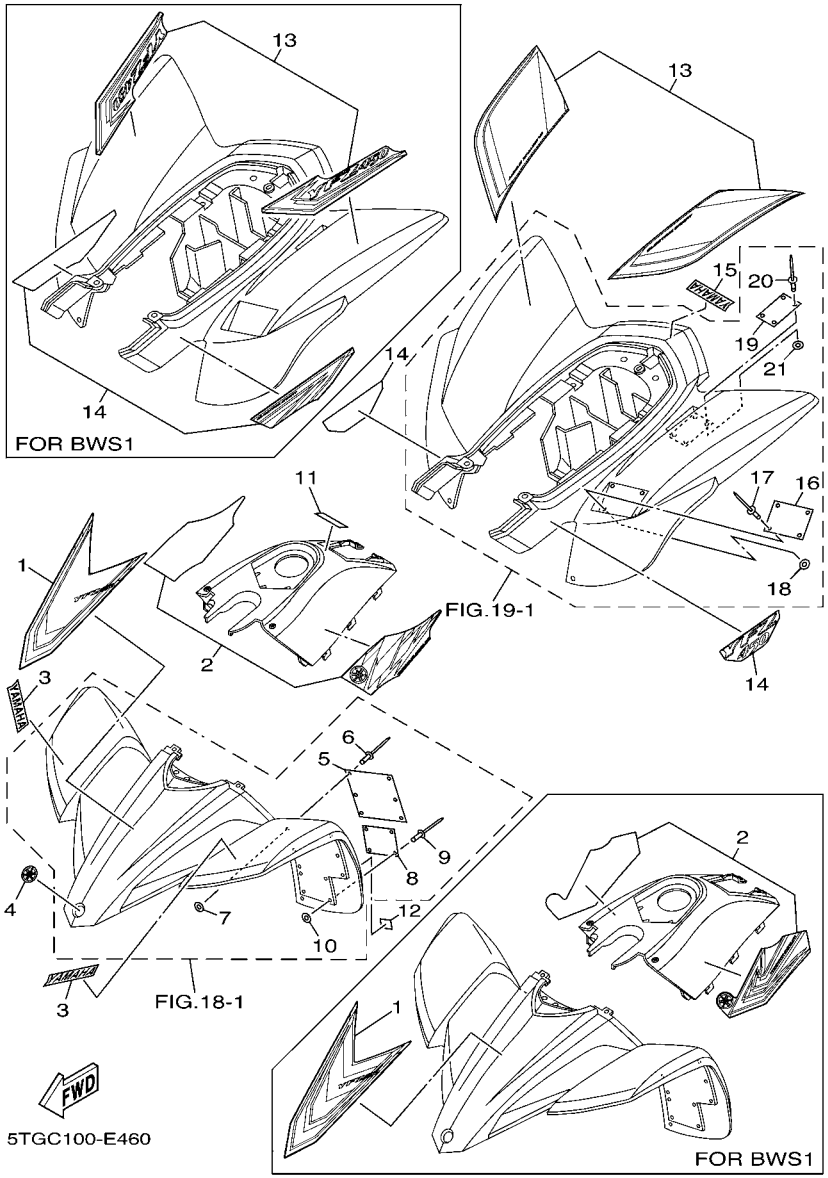

FIG. 46 EMBLEM & LABEL 3

REF. NO.	PART NO.	DESCRIPTION	USA	CAN	EUR	OCE	JPN	REMARKS
1	5TG–21569–70	GRAPHIC 1			1			UR FOR DPBSE
	5TG–21569–80	GRAPHIC 1			1			UR FOR BWS1
2	5TG–24250–70	GRAPHIC SET			1			UR FOR DPBSE
	5TG–24250–80	GRAPHIC SET			1			UR FOR BWS1
3	3GD–2153E–00	EMBLEM, YAMAHA			2			UR FOR DPBSE
	3GD–2153E–10	EMBLEM, YAMAHA			2			UR FOR BWS1
4	4KN–2836B–10	TUNING FORK MARK			1			
5	5FK–21568–00	LABEL, WARNING			1			
6	90267–32004	RIVET, BLIND			6			
7	90201–03313	WASHER, PLATE			6			
8	5FK–21697–00	LABEL, CAUTION 2			1			
9	90267–32004	RIVET, BLIND			4			
10	90201–03313	WASHER, PLATE			4			
11	5TG–2415E–00	LABEL, CAUTION			1			
12	4GB–2155A–00	MARK,EC			1			
13	5TG–2165A–50	GRAPHIC SET,REAR FENDER			1			UR FOR DPBSE
	5TG–2165A–60	GRAPHIC SET,REAR FENDER			1			UR FOR BWS1
14	5TG–2163G–30	EMBLEM 1			2			UR FOR DPBSE
	5TG–2165B–30	GRAPHIC SET,REAR FENDER			1			UR FOR BWS1
15	4ES–2153E–01	EMBLEM, YAMAHA			1			UR FOR DPBSE
	4ES–2153E–10	EMBLEM, YAMAHA			1			UR FOR BWS1
16	5TG–21696–40	LABEL, CAUTION			1			
17	90267–32004	RIVET, BLIND			4			
18	90201–03313	WASHER, PLATE			4			
19	5FK–2151H–00	LABEL 5			1			
20	90267–32004	RIVET, BLIND			4			
21	90201–03313	WASHER, PLATE			4			

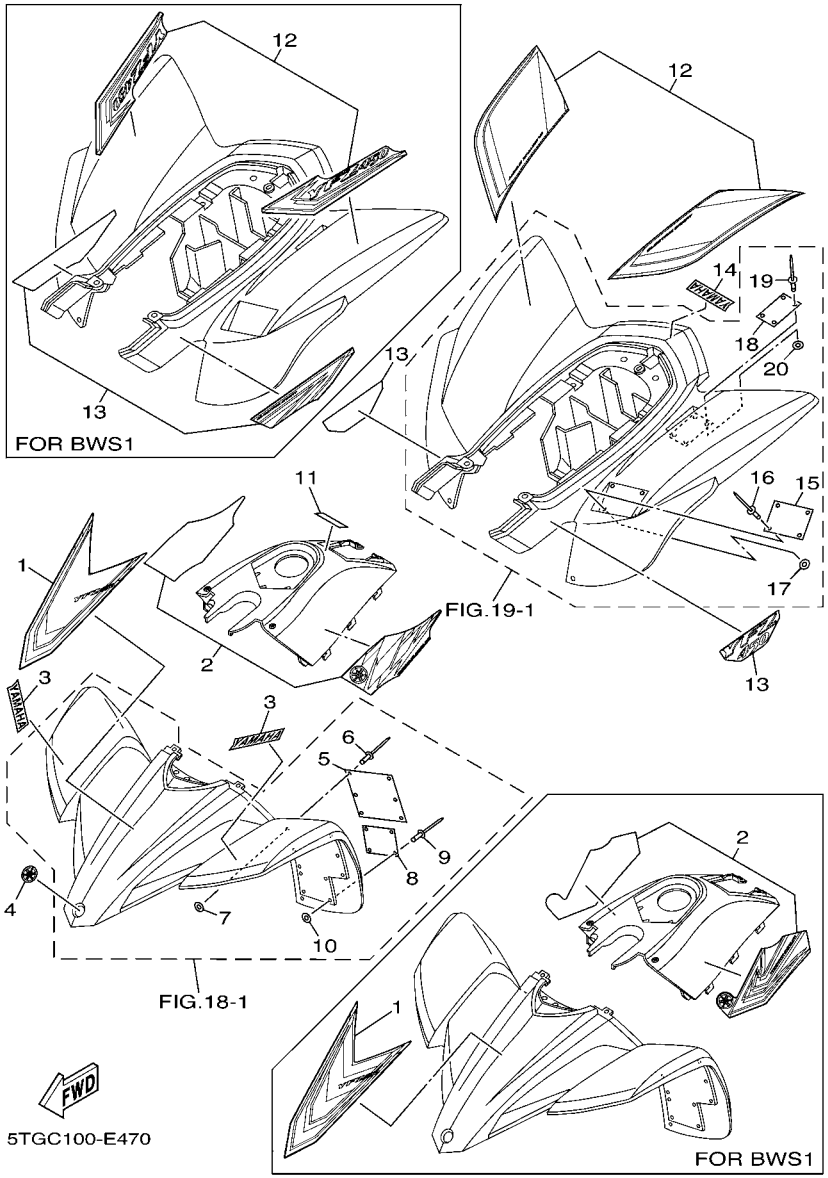

FIG. 47 EMBLEM & LABEL 4

REF. NO.	PART NO.	DESCRIPTION	USA	CAN	EUR	OCE	JPN	REMARKS
1	5TG–21569–70	GRAPHIC 1				1		UR FOR DPBSE
	5TG–21569–80	GRAPHIC 1				1		UR FOR BWS1
2	5TG–24250–70	GRAPHIC SET				1		UR FOR DPBSE
	5TG–24250–80	GRAPHIC SET				1		UR FOR BWS1
3	3GD–2153E–00	EMBLEM, YAMAHA				2		UR FOR DPBSE
	3GD–2153E–10	EMBLEM, YAMAHA				2		UR FOR BWS1
4	4KN–2836B–10	TUNING FORK MARK				1		
5	5FE–21568–11	LABEL, WARNING				1		ENGLISH
6	90267–32004	RIVET, BLIND				6		
7	90201–03313	WASHER, PLATE				6		
8	5FE–21697–01	LABEL, CAUTION 2				1		ENGLISH
9	90267–32004	RIVET, BLIND				4		
10	90201–03313	WASHER, PLATE				4		
11	5TG–2415E–00	LABEL, CAUTION				1		
12	5TG–2165A–50	GRAPHIC SET,REAR FENDER				1		UR FOR DPBSE
	5TG–2165A–60	GRAPHIC SET,REAR FENDER				1		UR FOR BWS1
13	5TG–2163G–30	EMBLEM 1				2		UR FOR DPBSE
	5TG–2165B–30	GRAPHIC SET,REAR FENDER				1		UR FOR BWS1
14	4ES–2153E–01	EMBLEM, YAMAHA				1		UR FOR DPBSE
	4ES–2153E–10	EMBLEM, YAMAHA				1		UR FOR BWS1
15	5TG–21696–30	LABEL, CAUTION				1		
16	90267–32004	RIVET, BLIND				4		
17	90201–03313	WASHER, PLATE				4		
18	5FE–2151H–01	LABEL 5				1		ENGLISH
19	90267–32004	RIVET, BLIND				4		
20	90201–03313	WASHER, PLATE				4		

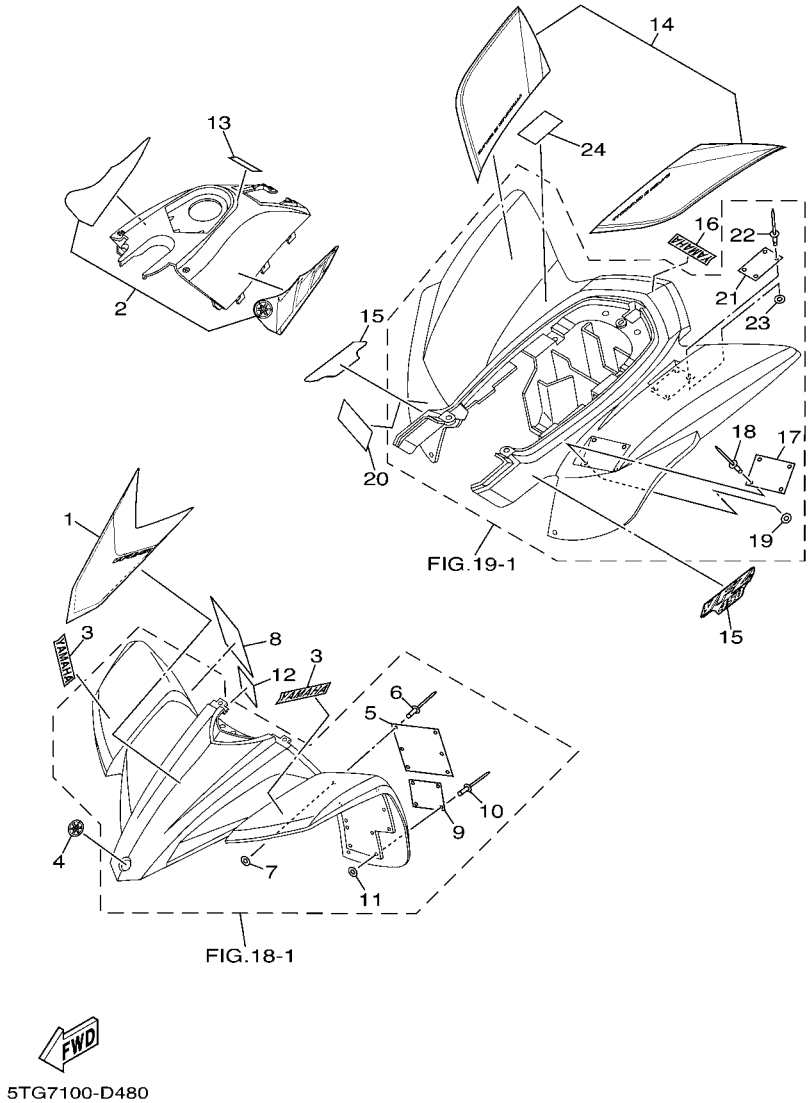

FIG. 48 EMBLEM & LABEL 5

REF. NO.	PART NO.	DESCRIPTION	USA	CAN	EUR	OCE	JPN	REMARKS
1	5TG–21569–70	GRAPHIC 1					1	
2	5TG–24250–70	GRAPHIC SET					1	
3	3GD–2153E–00	EMBLEM, YAMAHA					2	
4	4KN–2836B–10	TUNING FORK MARK					1	
5	5FE–21568–11	LABEL, WARNING					1	ENGLISH
6	90267–32004	RIVET, BLIND					6	
7	90201–03313	WASHER, PLATE					6	
8	4SH–21568–00	LABEL, WARNING					1	JAPANESE
9	5FE–21697–01	LABEL, CAUTION 2					1	ENGLISH
10	90267–32004	RIVET, BLIND					4	
11	90201–03313	WASHER, PLATE					4	
12	4SH–21697–00	LABEL, CAUTION 2					1	JAPANESE
13	3FB–2415E–C0	LABEL, CAUTION					1	JAPANESE
14	5TG–2165A–50	GRAPHIC SET,REAR FENDER					1	
15	5TG–2163G–30	EMBLEM 1					2	
16	4ES–2153E–01	EMBLEM, YAMAHA					1	
17	5TG–21696–30	LABEL, CAUTION					1	
18	90267–32004	RIVET, BLIND					4	
19	90201–03313	WASHER, PLATE					4	
20	5TG–21696–60	LABEL, CAUTION					1	
21	5FE–2151H–01	LABEL 5					1	ENGLISH
22	90267–32004	RIVET, BLIND					4	
23	90201–03313	WASHER, PLATE					4	
24	4LB–2151H–02	LABEL 5					1	JAPANESE

PART NO.	GRID NO.
5TG–11102–10	B – 2
4KG–1111G–00	B – 2
5TA–11133–10	B – 2
5TA–11134–10	B – 2
5TG–11166–00	B – 2
5TG–11167–00	B – 2
371–11167–01	B – 2
5TA–11181–00	B – 2
5TG–11191–00	B – 2
5TA–11193–00	B – 2
5TA–11311–02	B – 3
5TA–11351–00	B – 3
5TG–11395–00	B – 3
5TG–11400–10	B – 4
5TG–11412–10	B – 4
5TG–11422–10	B – 4
5BE–11454–00	B – 4
5TA–11455–11	B – 4
5TA–11531–01	B – 4
5TA–11536–00	B – 4
5TG–11603–00	B – 4
5TG–11631–10	B – 4
5TG–11633–10	B – 4
5TG–11651–10	B – 4
5TG–11681–00	B – 4
5TA–12111–00	B – 5
5TA–12112–00	B – 5
5TA–12113–00	B – 5
5TA–12114–00	B – 5
4GY–12117–00	B – 5
5BE–12117–00	B – 5
1AA–12118–00	B – 5
1WG–12118–00	B – 5
33M–12119–00	B – 5
4SV–12119–00	B – 5
5TA–12121–00	B – 5
3GM–12126–00	B – 5
3FV–12153–10	B – 6
3LD–12168–00	B – 5
3LD–12168–20	B – 5
3LD–12168–40	B – 5
3LD–12168–60	B – 5
3LD–12168–80	B – 5
3LD–12168–A0	B – 5
3LD–12168–F0	B – 5
3LD–12168–H1	B – 5
3LD–12168–K1	B – 5
3LD–12168–M1	B – 5

PART NO.	GRID NO.
3LD–12168–R1	B – 5
3LD–12168–U1	B – 5
3LD–12168–W1	B – 5
3LD–12168–Y1	B – 5
3LD–12169–11	B – 5
3LD–12169–31	B – 6
3LD–12169–50	B – 6
3LD–12169–70	B – 6
3LD–12169–90	B – 6
3LD–12169–E0	B – 6
3LD–12169–G0	B – 6
3LD–12169–J0	B – 6
3LD–12169–L0	B – 6
3LD–12169–N0	B – 6
3LD–12169–T0	B – 6
5TA–12170–10	B – 7
5TG–12180–20	B – 7
5TA–12210–00	B – 7
4FM–12213–00	B – 7
5BE–12241–00	B – 7
5TA–12251–01	B – 7
5TA–12252–00	B – 7
5TG–12299–00	B – 7
5TG–12405–00	B – 9
5TG–12422–00	B – 8
5TG–12439–00	B – 8
5DJ–12451–00	B – 8
5GR–12458–00	B – 8
5TG–12461–10	B – 9
5SL–12462–00	B – 9
5TG–12467–10	B – 9
5TG–12481–00	B – 9
5TG–12482–00	B – 9
5BE–12564–00	B – 8
5TG–12576–00	B – 9
5TG–12577–00	B – 9
583–13113–00	C – 5
5TJ–13161–00	B – 10
5TG–13171–00	B – 11
5TA–13300–00	B – 10
5TA–13320–00	B – 10
5TA–13341–00	B – 10
5BE–13342–00	B – 10
5BE–13411–00	B – 10
5TA–13412–00	B – 10
5TG–13416–10	B – 11
5TG–13418–10	B – 11
5TA–13440–00	B – 10

PART NO.	GRID NO.
5BE–13447–10	B – 10
5TG–13464–00	D – 4
5TG–13465–00	D – 4
5XD–13597–10	B – 12
5TG–14101–20	B – 14
5TG–14101–30	B – 14
4MX–14115–00	B – 15
5TJ–14118–00	C – 2
3TJ–14137–40	B – 15
5BE–14146–00	B – 15
5PA–14146–00	B – 15
633–14159–00	B – 14
3TJ–14159–40	B – 14
3TJ–14160–40	B – 15
5TG–14171–00	B – 15
3TJ–14191–40	B – 14
24W–14193–00	C – 2
5TG–14197–00	C – 2
5NX–14216–00	B – 15
5TG–14225–00	C – 2
5TA–14227–00	C – 2
5TA–14239–00	C – 2
5TG–14255–00	C – 2
5TG–14261–00	C – 2
5JG–14264–00	B – 14
3TJ–14267–40	B – 14
5JG–14275–00	B – 14
5TA–14293–00	C – 2
3TJ–14293–40	B – 15
5TA–14335–00	B – 15
5TG–14335–00	C – 2
5JG–14346–00	B – 15
5TA–14371–00	B – 15
5JG–14388–00	B – 14
4MX–14392–00	B – 14
5TG–14409–00	B – 12
5TG–14411–00	B – 12
5TG–14412–00	B – 12
5TG–14417–00	C – 2
5TG–14418–00	C – 2
5TG–14419–00	B – 13
5TA–14428–00	C – 2
5TG–1442F–00	B – 12
31A–14435–00	B – 12
5GH–14436–00	B – 12
5TG–14451–00	B – 12
4FU–14452–00	B – 12
5TG–14453–00	B – 12

PART NO.	GRID NO.
59V–14457–00	B – 12
5TG–14458–00	B – 12
5TG–14459–00	B – 12
4ES–14462–00	B – 12
5TG–14479–00	B – 12
5JG–14521–00	B – 14
5JG–14522–00	B – 14
5JG–14531–00	B – 15
3TJ–14536–40	B – 15
5JG–14546–01	B – 14
676–14548–00	B – 14
4MX–14561–00	B – 15
5TG–14561–00	C – 2
6H4–14561–00	B – 15
5NX–14562–00	B – 15
3TJ–14562–40	B – 15
5JG–14565–00	B – 15
5JG–14591–00	B – 15
5TG–14591–00	C – 2
688–14592–00	B – 14
5TG–14611–11	C – 3
3VD–14613–01	C – 3
5TG–14628–10	C – 3
5TG–14711–00	C – 3
8FA–14714–10	C – 3
5TG–14718–00	C – 3
5TG–14752–00	C – 3
5TG–14787–00	C – 3
5BE–14788–00	C – 3
5TG–14916–V1	B – 15
3TJ–14923–40	B – 15
3TJ–14933–40	B – 15
5TG–14935–00	C – 2
5JG–14940–17	B – 15
5TA–14943–19	B – 14
5TG–14943–89	C – 2
5JG–14947–00	B – 14
4MX–14948–06	B – 14
3TJ–1494F–23	B – 14
5JG–14951–00	B – 14
3TJ–14952–40	B – 15
5JG–14959–00	B – 14
5TG–14959–00	C – 2
5JG–14984–00	B – 14
4SR–14985–00	B – 14
5TA–14987–00	C – 2
5TG–14987–00	C – 2
4FN–14997–00	B – 14

PART NO.	GRID NO.
5TA–14997–00	B – 15
5TG–15100–01	C – 4
5TG–1531A–00	B – 13
5TG–1532A–00	B – 13
3Y1–15363–00	C – 5
5TG–15370–00	B – 13
4JT–15381–01	C – 4
5BE–15383–01	C – 4
5TG–15411–10	C – 5
5TG–15415–00	C – 5
5TA–15421–00	C – 4
5TG–15431–10	C – 5
5TG–15441–10	C – 4
5TG–15451–10	C – 5
5TG–15453–00	C – 6
5TG–15462–00	C – 6
5TG–15484–10	C – 6
5TG–1549B–10	C – 5
5TG–15515–01	C – 7
5TG–15517–00	C – 7
5H0–15521–00	C – 7
5TG–15560–00	C – 7
5TG–15590–00	C – 7
5TG–16111–00	C – 8
5TG–16150–00	C – 8
2JN–16154–00	C – 8
5TG–16321–00	C – 8
4X7–16325–00	C – 8
5TG–16331–00	C – 8
5TG–16342–00	C – 8
5TG–16351–00	C – 8
5TG–16356–00	C – 8
5TG–16357–00	C – 8
5TA–16371–10	C – 8
5TG–16382–10	C – 8
5JG–16383–00	C – 8
5JG–16384–00	C – 8
5TA–16384–01	C – 9
5TG–17121–00	C – 10
5TG–17131–00	C – 10
5TG–17141–00	C – 10
5TG–17151–00	C – 10
5BF–17211–00	C – 10
5TG–17221–00	C – 10
5TG–17231–00	C – 10
5TG–17241–00	C – 10
5TG–17251–00	C – 10
5TG–17402–00	C – 10

PART NO.	GRID NO.
5TG–17411–00	C – 10
5NG–17460–00	C – 11
5TA–17466–00	C – 4
4L0–17471–00	C – 4
5GR–17471–00	C – 11
5TG–18101–10	C – 12
5TG–18110–10	C – 12
5YT–18113–00	C – 12
5MW–18122–01	C – 12
3XK–18140–00	C – 12
5BE–18172–00	C – 12
3XJ–18173–10	C – 12
3XJ–18178–00	C – 12
3XJ–18182–00	C – 12
3XJ–18184–00	C – 12
4EW–18185–00	C – 12
5TG–18501–00	C – 12
5TG–18502–00	C – 12
5TG–18503–00	C – 12
5TG–18541–00	C – 12
5DH–18562–00	C – 4
5TG–21101–49	C – 13
5TG–21190–09	C – 13
5TG–21228–10	E – 10
5TG–21314–10	C – 13
5TG–21315–00	C – 13
5TG–21316–00	C – 13
5TG–21317–00	C – 13
5TG–21318–10	C – 13
22F–2139X–00	D – 14
	F – 5
5TG–2144G–10	F – 6
5TG–21471–00	C – 13
5TG–21513–10	C – 15
5FK–2151H–00	F – 12
5FE–2151H–01	F – 9
	F – 11
	F – 13
	F – 14
4LB–2151H–02	F – 14
4WU–2151H–10	F – 11
3GD–2153E–00	F – 9
	F – 10
	F – 12
	F – 13
	F – 14
4ES–2153E–01	F – 9
	F – 10

PART NO.	GRID NO.
4ES–2153E–01	F – 12
	F – 13
	F – 14
3GD–2153E–10	F – 9
	F – 10
	F – 12
	F – 13
4ES–2153E–10	F – 9
	F – 10
	F – 12
	F – 13
5TG–21541–00	C – 15
4GB–2155A–00	F – 12
4SH–21568–00	F – 14
5FK–21568–00	F – 12
5FE–21568–01	F – 9
	F – 10
4WU–21568–10	F – 10
5FE–21568–11	F – 13
	F – 14
5TG–21569–70	F – 9
	F – 10
	F – 12
	F – 13
	F – 14
5TG–21569–80	F – 9
	F – 10
	F – 12
	F – 13
5TG–21621–00	D – 2
5TG–21639–00	D – 2
5TG–2163A–00	D – 2
5TG–2163E–10	D – 2
5TG–2163F–10	D – 2
5TG–2163G–30	F – 9
	F – 10
	F – 12
	F – 13
	F – 14
5TG–21643–10	D – 2
5TG–21644–20	D – 2
5TG–2164F–10	D – 2
5TG–2164G–10	D – 3
1S3–2164H–00	D – 2
1S3–2164J–00	D – 3
5TG–2165A–50	F – 9
	F – 10
	F – 12

PART NO.	GRID NO.
5TG–2165A–50	F – 13
	F – 14
5TG–2165A–60	F – 9
	F – 10
	F – 12
	F – 13
5TG–2165B–30	F – 9
	F – 10
	F – 12
	F – 13
5TG–21691–00	D – 3
5TG–21696–30	F – 9
	F – 10
	F – 13
	F – 14
5TG–21696–40	F – 12
5TG–21696–50	F – 11
5TG–21696–60	F – 14
4SH–21697–00	F – 14
5FK–21697–00	F – 12
5FE–21697–01	F – 9
	F – 10
	F – 13
	F – 14
3JM–21697–10	F – 10
5TG–21711–00	C – 15
5TG–21711–10	C – 15
5TG–21715–00	D – 4
41R–21717–00	C – 13
5TG–2171A–00	C – 15
5TG–2171A–10	C – 15
5TG–21721–00	C – 15
5TG–21721–10	C – 15
12R–21747–00	D – 14
5TG–21750–00	D – 4
5LP–21761–01	D – 4
5TG–2177C–00	B – 12
26H–21828–00	D – 4
5TG–21871–00	D – 4
5TG–21875–00	D – 4
5TG–22110–20	D – 6
5TG–22128–00	D – 7
4X7–22129–00	D – 6
5LP–22141–00	D – 6
3YF–22149–00	D – 6
5TG–22151–00	D – 7
5TG–22178–00	C – 13
5TG–2217A–10	D – 6

PART NO.	GRID NO.
5TG–2217F–10	D – 7
5TG–22210–P0	D – 9
5TG–22210–R0	D – 9
5TG–22210–S0	D – 9
5TG–22210–T0	D – 9
4AA–22259–50	D – 9
	D – 12
5TG–22360–10	D – 7
5TG–22475–00	D – 6
1S3–23147–01	D – 6
5TG–23350–P0	D – 12
5TG–23350–R0	D – 12
5TG–23350–S0	D – 12
5TG–23350–T0	D – 12
1S3–23501–00	D – 11
1S3–23502–00	D – 12
5TG–23505–20	D – 11
5TG–23505–30	D – 11
5TG–23506–20	D – 12
5TG–23506–30	D – 12
5TG–23507–00	D – 11
5TG–23507–20	D – 11
5TG–23508–00	D – 11
5TG–23508–20	D – 11
5YT–23517–00	D – 11
5TG–23540–00	D – 11
5TG–23540–20	D – 11
5TG–23550–00	D – 12
5TG–23550–20	D – 12
5LP–23579–00	D – 11
1UY–23812–00	D – 10
5TG–23813–10	D – 10
8K1–23814–00	D – 10
5TG–23816–00	D – 10
1S3–23831–00	D – 10
1S3–23841–00	D – 10
1S3–23845–00	D – 10
1UY–23868–01	D – 10
5GT–23872–00	C – 14
1UY–23894–01	D – 10
5TG–24110–00	D – 14
4EW–2412F–00	D – 14
5TG–2414H–00	D – 14
5TG–2415E–00	F – 12
	F – 13
5PW–2415E–11	F – 9
	F – 10
5PW–2415E–21	F – 10

PART NO.	GRID NO.
3FB–2415E–C0	F – 14
4SH–2416E–00	F – 10
5TG–24181–00	D – 14
5TG–24250–70	F – 9
	F – 10
	F – 12
	F – 13
	F – 14
5TG–24250–80	F – 9
	F – 10
	F – 12
	F – 13
5TG–24311–10	C – 2
5TG–24500–01	D – 14
4X8–24512–00	D – 14
3AC–24523–00	D – 14
4HM–24524–00	D – 14
3AJ–24534–01	D – 14
5KM–24610–00	D – 14
5TG–2470F–40	D – 15
5TG–24710–40	D – 15
214–24724–00	D – 15
5TG–24725–00	D – 15
22W–24741–00	D – 15
5TG–2481M–00	F – 3
1S3–25111–00	E – 2
5LP–25117–00	E – 2
1S3–25127–00	E – 2
5TG–2514A–00	E – 4
5LP–25180–10	E – 2
5TG–25311–20	D – 6
5TG–25317–00	D – 6
5TG–25381–10	E – 5
1S3–25383–00	E – 5
1S3–25386–00	E – 5
5LP–25390–10	E – 5
1S3–25415–00	E – 5
5TG–25438–10	E – 5
5TG–25689–00	F – 4
1S3–25712–00	E – 6
5TG–25721–20	D – 6
5TG–25726–00	F – 4
5TG–25727–00	F – 4
5TG–2580E–20	E – 10
5TG–2580T–10	E – 3
5TG–2580U–10	E – 3
5TG–2580W–20	E – 6
1S3–25828–00	E – 3

PART NO.	GRID NO.
3GD–2582T–10	E – 3
1S3–2582W–00	E – 6
5MV–25833–00	E – 8
5UG–25833–00	E – 6
5TG–2583T–10	E – 8
5LP–25852–01	E – 8
3XP–25852–50	E – 10
2VN–25854–00	E – 10
4L0–25854–00	E – 8
2VN–25855–00	E – 10
2GU–25866–00	E – 8
5LP–25867–00	E – 8
5TG–25871–00	E – 8
5TG–25872–00	E – 8
5TG–25873–00	E – 8
5TG–25874–20	E – 10
5TG–25875–00	D – 13
5TG–25876–00	D – 13
5TG–2587A–00	E – 10
5TG–25886–10	D – 7
5TG–25887–10	D – 8
5TG–25894–00	E – 10
5TG–25895–10	E – 10
5TG–25897–00	C – 14
5MV–2589F–00	E – 8
4NK–2589H–00	E – 8
3SP–25914–51	E – 6
3JD–25917–00	E – 3
	E – 6
3JD–25919–00	E – 3
5TG–25924–00	E – 3
3JD–25926–00	E – 3
1UY–25926–51	E – 3
3SP–25926–51	E – 6
5DH–25933–00	E – 6
3LD–25934–01	E – 6
1UY–25937–51	E – 3
	E – 6
1UY–25938–51	E – 3
3JD–25961–00	E – 3
5TG–25972–00	E – 6
1UY–25973–51	E – 6
1UY–25974–51	E – 6
5TG–25975–00	E – 6
5TG–25977–50	E – 6
5TG–25978–00	E – 6
5TG–26111–20	E – 7
5TG–26124–00	E – 7

PART NO.	GRID NO.
5LP–26241–00	E – 7
5TG–26250–10	E – 7
5TG–26259–00	E – 7
5TG–26311–00	E – 7
5TG–26335–20	E – 7
5TA–26337–00	F – 4
5TG–26341–20	E – 7
5HD–26342–00	E – 7
5TG–26372–00	E – 7
371–27114–00	D – 15
5TG–27211–10	E – 9
4SS–27218–00	E – 10
2YK–27222–00	E – 10
3KW–27234–00	E – 10
5TG–27411–01	E – 9
5TG–27421–01	E – 9
5TG–27813–10	E – 9
5TG–28100–10	C – 14
1NV–2811A–01	C – 14
5LP–2819R–00	F – 9
5TG–28215–00	E – 12
4KN–2836B–10	F – 9
	F – 10
	F – 12
	F – 13
	F – 14
5GT–2836B–10	E – 7
5TG–2845N–40	E – 12
5TG–2845N–50	E – 12
5TG–2845R–40	E – 12
5TG–2845R–50	E – 12
5TG–81410–02	E – 13
5TG–81450–00	E – 13
5TG–81801–00	E – 14
3AJ–81809–00	E – 14
5TG–81815–00	E – 14
4WP–81826–00	E – 14
4XV–8182A–00	E – 14
4WP–81844–00	E – 14
1FK–81847–00	E – 14
4G0–81871–00	E – 14
5TG–81890–00	E – 14
5JW–81940–02	F – 5
5DM–81950–00	F – 7
1RL–81950–92	F – 5
5TG–81960–00	F – 5
3WP–81980–00	F – 6
4WA–81980–00	F – 6

PART NO.	GRID NO.
4GY–82100–01	F – 5
4UC–82100–01	F – 5
5TG–82115–00	F – 5
5TG–82116–00	F – 5
5TG–82121–10	F – 5
29W–82123–00	F – 5
5TG–82128–10	F – 5
36Y–82151–00	F – 5
5ND–82180–00	F – 6
5TA–82310–10	F – 5
5TG–82510–00	F – 5
5TG–82530–10	F – 6
3GB–82540–01	F – 5
5TG–82541–00	F – 5
5EB–82560–00	F – 5
5LP–82560–00	F – 5
5ND–82560–00	F – 6
3HN–82569–00	F – 6
3HN–82579–00	F – 6
5TG–82590–10	F – 6
5TG–8259A–00	B – 15
5TG–82910–00	F – 4
5TG–82911–00	F – 4
4V4–82913–00	E – 7
5TG–82913–00	F – 4
1UY–82917–00	F – 4
5GH–83516–00	F – 6
5TG–83530–00	F – 6
5TJ–83912–00	F – 4
5TG–83922–10	E – 8
5TG–83923–00	F – 4
3TB–83936–00	F – 6
437–83936–01	E – 7
	F – 6
5HD–83951–00	F – 4
4KB–83973–00	F – 4
5LP–83980–00	E – 8
5TG–84110–03	E – 15
5TG–84118–00	E – 15
5TG–84119–00	E – 15
5TG–84140–01	E – 15
5TG–84163–00	C – 14
5TG–84165–01	E – 15
5TG–84166–01	E – 15
5TG–84310–03	E – 15
4KB–84314–01	E – 15
5TG–84340–01	E – 15
5TG–84551–00	F – 3

PART NO.	GRID NO.
5TG–84553–00	F – 3
5TG–84710–20	F – 2
	F – 3
2EK–85111–00	F – 8
3Y6–85130–02	F – 8
449–85131–02	F – 8
5TG–85370–00	F – 7
5TG–85540–10	F – 5
5TG–85546–00	F – 5
5TG–85885–00	B – 15
M12–T133A–00	D – 14
5LP–W0041–00	E – 8
5TG–W0042–50	E – 10
5TG–W0045–20	E – 3
5TG–W0045–30	E – 4
5TG–W0046–10	E – 6
5TG–W0047–00	E – 6
3LC–W0047–50	E – 3
1UY–W0048–50	E – 3
	E – 6
5TG–W0057–00	E – 3
5TG–W0057–10	E – 6
5TG–W2151–00	C – 15
5TG–W2151–10	C – 15
5TG–W215B–00	C – 15
5TG–W215B–10	C – 15
5TG–W215C–00	C – 15
5TG–W215C–10	C – 15
5TG–W215D–00	C – 15
5TG–W215D–10	C – 15
5TG–W2161–02	D – 2
5TG–W2161–12	D – 2
5TG–W216B–02	D – 2
5TG–W216B–11	D – 2
5TG–W216C–02	D – 2
5TG–W216C–12	D – 2
90101–06034	C – 12
90101–12024	D – 9
90102–12003	D – 9
90105–05331	E – 10
90105–06027	B – 2
90105–06084	B – 12
	D – 2
	D – 4
	F – 5
90105–06553	C – 4
90105–08112	C – 14
90105–08520	E – 4

PART NO.	GRID NO.
90105–10131	D – 13
90105–10132	D – 12
90105–10135	D – 12
90105–10147	C – 3
90105–10148	C – 13
90105–101A9	E – 6
90105–104A7	B – 2
90105–106A3	B – 2
90105–12038	D – 7
90105–12039	D – 7
90105–12040	D – 7
90109–06027	F – 4
90109–06031	C – 12
90109–063F1	C – 15
	D – 7
90109–063F8	C – 12
90109–066F0	B – 2
90109–066G1	C – 13
90109–067F4	D – 13
90109–08076	E – 6
90109–08082	E – 3
90109–10013	E – 5
90110–05201	C – 15
90110–06004	C – 7
90110–06058	B – 10
90110–06134	C – 3
90110–06188	B – 10
90110–12001	D – 6
90111–06038	C – 15
	D – 2
90113–06055	E – 6
90114–10006	E – 2
90114–10013	E – 5
90116–08022	B – 2
90122–06002	B – 12
90149–05283	E – 13
90149–06011	D – 14
90149–06126	C – 4
90149–06250	B – 4
90149–06326	C – 4
90154–05013	D – 2
90154–06014	E – 4
90154–06020	C – 3
90159–06123	C – 8
90170–12054	D – 10
90170–12055	D – 10
90170–14171	B – 4
90170–20327	C – 8

PART NO.	GRID NO.
90171–10001	D – 10
	D – 11
90171–14002	E – 4
90171–16001	E – 5
90176–06041	F – 3
90179–06668	B – 3
90179–12657	E – 13
90179–20001	C – 8
	C – 11
90179–36002	E – 6
90183–05008	C – 15
90185–10002	C – 13
90185–10011	C – 13
	E – 5
90185–10012	D – 12
90185–12002	D – 7
90185–12007	D – 9
90185–14070	D – 10
90185–16127	D – 6
90201–03313	F – 9
	F – 10
	F – 12
	F – 13
	F – 14
90201–043H7	B – 12
90201–05015	C – 3
90201–056G0	F – 2
	F – 3
90201–06013	D – 3
90201–06057	D – 7
90201–06071	D – 14
90201–064R0	F – 3
90201–06557	B – 13
	E – 15
90201–06778	D – 3
90201–067A0	D – 2
90201–08043	C – 14
90201–08053	C – 13
90201–08083	E – 10
90201–082A6	D – 5
90201–08326	C – 3
90201–08512	B – 8
90201–086P8	D – 3
90201–10025	B – 2
90201–10035	D – 13
90201–10036	C – 13
90201–10037	D – 12
90201–10118	E – 8

PART NO.	GRID NO.
90201–10118	E – 10
90201–10119	C – 8
90201–12020	E – 13
90201–12033	D – 9
90201–12034	D – 9
90201–12166	B – 10
	C – 12
90201–125L6	C – 8
90201–14226	D – 10
90201–14586	E – 4
90201–15701	C – 5
90201–160F6	D – 6
90201–163M0	E – 5
90201–20022	E – 4
90202–08045	B – 14
90208–37001	E – 6
90209–06096	B – 12
90209–06174	B – 9
90209–10229	D – 10
	D – 11
90209–21332	C – 10
90209–25342	C – 10
90209–25349	C – 10
90209–25350	C – 10
90215–14287	B – 4
90215–20005	C – 8
90215–21003	C – 8
	C – 11
90240–08124	E – 10
90267–32004	F – 9
	F – 10
	F – 12
	F – 13
	F – 14
90267–48088	C – 13
90267–48138	B – 12
90269–06002	C – 15
	D – 14
90269–07076	B – 9
90280–03006	B – 4
90338–07007	F – 4
90338–18122	C – 14
90338–23004	D – 6
90338–30096	C – 6
90340–12112	B – 2
90340–14003	C – 5
90340–27003	C – 5
90380–22111	D – 6

PART NO.	GRID NO.
90381–15088	D – 11
90387–05016	E – 10
90387–06024	D – 2
90387–06074	D – 3
90387–06081	D – 3
90387–060A7	B – 9
90387–06120	D – 7
90387–062L2	C – 15
90387–06648	E – 12
90387–066J1	D – 14
90387–066Y6	D – 4
90387–0714B	B – 9
90387–07598	E – 15
90387–07789	B – 13
90387–08023	B – 12
90387–086N4	C – 14
90387–090R0	D – 10
90387–100Y6	D – 11
90387–101R3	D – 11
90387–12019	D – 7
90387–12020	D – 7
90387–12030	D – 7
90387–123M3	D – 7
90387–150R1	E – 4
90387–16014	D – 6
90387–160W0	D – 6
90387–164N2	C – 4
90387–20005	E – 4
90387–204H5	C – 10
90387–2513F	C – 10
90387–2810U	C – 10
90401–08176	B – 11
90401–10025	B – 10
90401–10159	E – 8
	E – 10
90430–06014	B – 2
	B – 8
90430–08119	B – 11
90430–10148	C – 4
	F – 5
90430–10188	B – 10
90445–07340	C – 6
90445–083J4	D – 14
90445–09020	D – 4
90445–090F7	D – 4
90445–11182	B – 2
90450–22017	B – 11
90450–57009	B – 12

PART NO.	GRID NO.
90450–59002	B – 12
90450–61001	B – 12
90450–99064	B – 12
90461–10011	C – 4
90462–08044	C – 6
90462–08049	C – 6
90462–10025	C – 6
90462–12003	C – 13
90462–12005	C – 13
90464–09M31	D – 4
90464–13073	F – 6
90464–13133	C – 2
	D – 4
90464–15065	F – 6
90464–15157	F – 5
90464–15195	F – 6
90464–20031	F – 7
90464–20159	F – 6
90464–20181	E – 12
	F – 6
90464–23041	F – 7
90464–30040	F – 6
90464–48174	C – 15
	F – 7
90465–08044	D – 4
90465–08047	D – 4
90465–10017	C – 5
90465–13M11	F – 7
90467–07093	C – 6
90467–08003	D – 4
90467–10038	C – 2
90467–11019	D – 4
90467–11044	E – 10
90467–11106	B – 3
90467–12053	C – 2
90467–14015	B – 2
	B – 13
90467–22080	B – 12
90467–23109	B – 9
90468–16191	D – 10
90480–10011	E – 10
90480–10289	D – 4
90480–14102	E – 15
90480–15006	C – 15
90480–15235	B – 9
90480–18004	D – 14
90480–18290	D – 14
90480–24001	D – 5

PART NO.	GRID NO.
90480–25001	F – 2
	F – 3
90501–043E0	C – 5
90501–052G5	C – 12
90501–08728	B – 3
90501–100A0	B – 13
90501–224A8	C – 8
90506–20380	E – 9
90508–16015	C – 9
90508–26561	C – 12
90508–35015	C – 12
90560–06201	D – 2
91312–05010	F – 7
91312–06016	C – 4
91314–06020	B – 10
	C – 5
91314–06030	B – 10
	C – 5
91314–06040	C – 5
91314–06050	C – 4
91314–06060	C – 4
91314–06065	B – 10
91314–06075	C – 4
91314–08040	D – 6
91316–04012	B – 14
91317–05012	C – 5
91317–06014	E – 13
91317–06016	D – 4
91401–16012	E – 10
91402–20020	D – 10
	D – 12
91402–30025	D – 9
	E – 4
91402–30030	E – 5
91808–16023	B – 2
91812–16001	C – 6
91A20–07004	C – 2
92012–06016	F – 3
92012–08012	D – 2
92012–08025	E – 10
92014–06016	F – 4
92017–06014	F – 4
92017–06025	D – 14
92017–06035	D – 2
92017–08020	D – 3
92017–10030	C – 13
92902–10200	E – 2
	E – 5

PART NO.	GRID NO.
92903–08600	D – 6
92907–05100	E – 7
	F – 8
92907–05200	F – 8
92907–06200	C – 3
92990–06200	C – 3
92990–10600	C – 3
93101–14164	C – 5
93102–11008	B – 8
93102–12106	B – 8
93102–12224	C – 9
	C – 12
93102–22216	E – 2
93102–25081	C – 14
93102–25099	C – 14
93102–32480	C – 10
93105–26026	E – 2
93106–22019	D – 6
93106–46003	D – 6
93109–17071	D – 7
93109–20001	D – 7
93112–31011	D – 10
93210–07003	B – 11
93210–07135	B – 10
93210–09008	B – 11
93210–10197	B – 10
	C – 4
	D – 4
93210–12759	B – 11
93210–14369	C – 5
93210–16500	B – 9
93210–16629	D – 4
93210–19123	C – 5
93210–19758	B – 8
93210–21190	D – 4
93210–22164	C – 10
93210–27370	C – 5
93210–36769	E – 6
93210–47675	B – 10
93210–60426	C – 5
93210–66001	D – 6
93210–71001	D – 6
93300–60804	C – 13
93306–00105	B – 8
93306–00426	C – 10
93306–00431	C – 10
93306–00446	E – 2
93306–20231	E – 2

PART NO.	GRID NO.
93306–20335	B – 4
93306–20352	C – 14
93306–20532	C – 10
93306–20593	C – 10
93306–30633	B – 4
93306–90501	C – 12
93306–90804	D – 6
93306–90805	D – 6
93310–212L6	C – 7
93310–63437	B – 4
93311–62574	B – 4
93315–31758	D – 7
93315–32052	D – 7
93315–32057	D – 7
93317–11287	C – 8
93317–22237	D – 6
93340–21505	C – 8
93410–67085	D – 6
93440–10085	C – 8
93440–10153	B – 2
	B – 10
93440–25084	C – 10
93440–28062	C – 10
93440–41178	B – 7
93450–22027	B – 4
93503–08007	C – 5
93515–32029	C – 8
93603–16219	B – 10
93604–10011	B – 8
93608–33002	C – 12
93612–16254	B – 3
93700–06004	D – 11
93900–00022	E – 5
93900–00030	E – 2
94107–10015	E – 2
94110–09015	E – 5
94582–13096	E – 5
94591–57118	B – 7
94701–00411	B – 2
94703–00411	B – 2
95022–06010	E – 10
95022–06012	D – 8
95022–08040	C – 14
95024–06012	B – 9
	C – 9
95024–06016	C – 5
	C – 11
95024–06025	B – 7

PART NO.	GRID NO.
95024–06025	B – 11
95024–06030	B – 8
	C – 5
95024–06035	B – 3
95024–06040	C – 5
95024–06080	C – 6
95024–10016	C – 4
95027–06008	C – 3
	F – 5
95027–06010	B – 2
95027–06012	B – 11
95027–06020	F – 5
95027–06025	B – 10
	D – 4
	E – 14
95307–05600	F – 8
95602–06200	E – 9
95602–08200	C – 14
95604–06100	E – 8
95607–05200	E – 10
95607–06100	F – 4
95607–06200	C – 15
	D – 2
95607–08200	D – 3
95617–06635	B – 2
95702–10500	E – 2
	E – 5
95704–08500	C – 3
95807–06012	E – 11
95807–06016	C – 15
95807–06020	B – 9
	E – 12
95807–06025	B – 9
	D – 7
	E – 15
95807–08016	D – 4
95812–08014	E – 12
95812–08020	C – 13
	E – 12
95812–08050	C – 13
95812–10055	C – 13
95812–10165	C – 13
95817–06014	E – 15
95817–08016	C – 13
95817–08025	C – 3
95817–10025	E – 9
95817–10035	E – 9
95822–08012	D – 2

PART NO.	GRID NO.
95827–06014	B – 3
95827–06020	D – 5
95827–06025	E – 8
95827–06030	D – 14
95827–08016	D – 3
95827–08020	D – 3
95827–08030	D – 10
97007–05016	F – 4
97022–08060	D – 10
97027–06025	D – 3
97707–50016	F – 2
	F – 3
98502–04012	B – 14
98507–03008	D – 14
98507–05020	E – 7
98514–06025	C – 4
98606–04018	D – 14
98707–06025	D – 14
98907–06012	F – 6
98980–06010	C – 3
99001–08600	B – 10
99009–10400	C – 8
99009–12400	B – 10
99009–20400	C – 10
99009–22500	C – 5
99009–30400	D – 11
99530–08012	B – 10
99530–08016	C – 5
99530–10114	B – 10
	C – 4
	D – 4
99530–10116	C – 4
99530–14016	C – 4